RELEASED 2012.11.02

GROUP NO.	ITEM	DESCRIPTION	SPEC	DWG NO.	S/TREATMENT
1	1	36P PLUG(RUBBER COUPLING)	FRITS4106RGG36-35SBOPG36F6/NEXUS		
2	2	ADAPTER-PG36	M8BSM36P36		
1	3	CONDUIT TUBE	RLTPC36B, PA12		
2	4	GASKET	ASSY, t=1.8		
2	5	NAME LABEL	304SS, t=0.5(MAX.)		

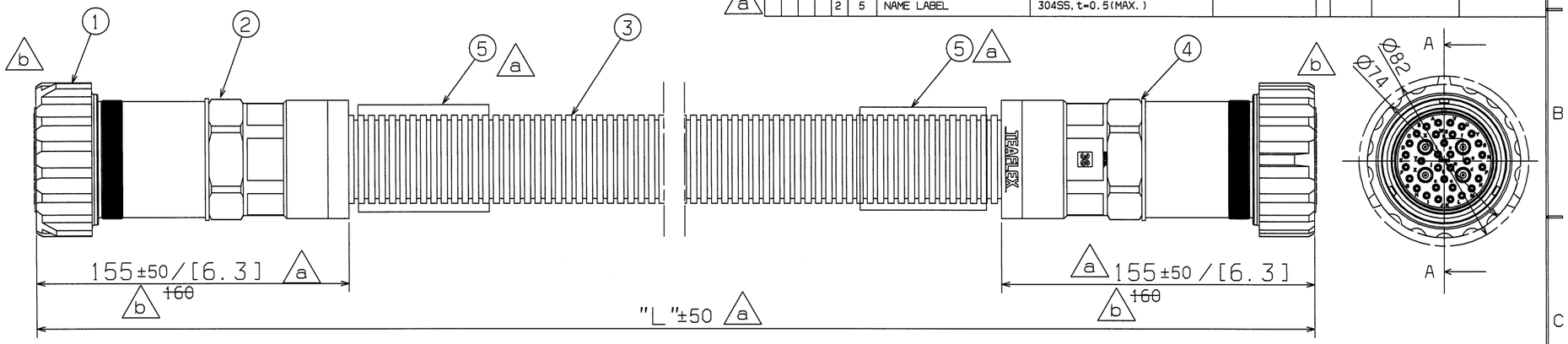

NOTE.
1. KIND OF CONNECTOR
   - Straight plug supplied with PG36 adapter
2. TECHNICAL CHARACTERISTICS
   - Arrangement : 36-35
   - Contacts: 4 size8 coax type contacts for RG59
     32 size16 pin crimp contacts
   - Working voltage: 700Vdc, 500Vac
   - Test voltage: 2,000Vac
   - Current rating: size8 = 73A at 20℃
     size16 = 22A at 20℃
   - Working temperature: (-55~+125)℃
   - IP rating (coupled connector): IP67
3. MATERIAL AND FINISH
   Contacts:
   -copper alloy
   -gold plating
   Inserts:
   -fire-resistant ethylene acrylic rubber
   Metallic parts:
   -aluminium alloy
   -electrodeposition of black paint(F6)
4. WEIGHT : 4.14kg
5. Non-assignment connector sockets/pins should be filled with sealing plug.
   (Signal pin : 10-305045-16
   Coaxial pin : 10-305045-8, GLENAIR)

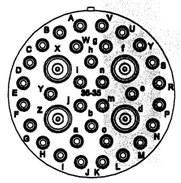

a JUMPER COUPLER PIN ASSIGNMENT

NO.	ITEM	TLC	NO.	ITEM	TLC
A	PEI1 LIVE ADD	84L01	a		
B	PEI2 LIVE ADD	84L02	b		
C	PEI3 LIVE ADD	84L03	c		
D	PEI4 LIVE ADD	84L04	d		
E			e		
F			f	VIDEO OUT	COAXIAL(L)
G			g		
H			h		
I	PEI LIVE ADD GND	84L09	i		
J	DPO LIVE ADD1	84L30	j		
K	DPO LIVE ADD2	84L31	m		
L	DPO LIVE ADD GND	84L32	n		
M					
N					
P					
R					
S					
T	DPH LIVE ADD1	84L38			
U	DPH LIVE ADD2	84L39			
V	DPH LIVE ADD GND	84L40			
W					
X	VIDEO IN	COAXIAL(R)			
Y					
Z					

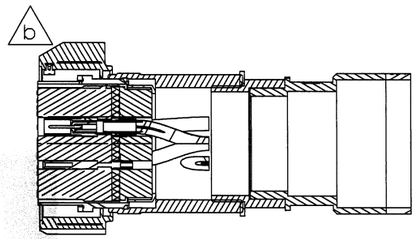

Section view A-A
Scale: 1:2

	DIMENSION
"L"	APPROX 3,200 +/- 50[125.98 +/- 1.96]

부품 PARTS			
	~ 40	2	4
	~ 30	2	3
	~ 10	1	1.5
	< 3	0.5	1

길이 LENGTH			
	~3150	-	7
	~1600	4	5
	~800	3	4
	~400	2	3
	~200	1.5	2
	~100	1	1.5

등급 GRADE	A	B
주물, 주강품 CASTING (±)		
~20M	8	14
~15M	7	12
~12M	6	10
~8M	5	8
~4M	4	6
~2M	3	4
~1M	2	3
~315	1	2
~120	1	2
~30	1	1

등급 GRADE	A	B	C
용접 구조물 WELDING (±)			
~20M	-	6.0	8.0
~15M	-	5.0	7.0
~12M	-	4.0	6.0
~8M	-	3.0	5.0
~4M	0.8	2.0	4.0
~2M	0.5	1.2	3.0
~1M	0.3	0.8	2.0
~315	0.2	0.5	1.2
~120	0.15	0.3	0.8
~30	0.1	0.2	0.5
3~6	0.05	0.1	0.2

등급 GRADE	A	B	C
기계 가공품 MACHINING (±)			
규정치않은 일반공차표 GENERAL TOLERANCE			

CHANGE	1)Weight & Sealing plug added. 2)DIM'S changed. 3)P/No.5 added. 4)JOR pin assignment added. 2012.03.12	DGN H.YSHIN	APP B.J.JONE	a
	Coupling shape & Dim's changed.(was 160mm) 2012.10.23	DGN H.YSHIN	APP B.J.JONE	b

GENERAL TOLERANCE (WMS-C-40201)

DIMENSION	WELDING	MACHING
0.5 ~ 6mm	±0.3	±0.1
6 ~ 30mm	±0.5	±0.2
30 ~ 120mm	±0.8	±0.3
120 ~ 400mm	±1.2	±0.5
400 ~ 1000mm	±2.0	±0.8
1000 ~ 2000mm	±3.0	±1.2
2000 ~ 4000mm	±4.0	±2.0
4000 ~ 6000mm	±6.0	±3.0
6000 ~ 12000mm	±7.0	±5.0
12000 ~ 22400mm	±9.0	±7.0
		±12.0

DIMENSION	CASTING
~ 120mm	±2.0
120 ~ 315mm	±2.5
315 ~ 630mm	±3.5
630 ~ 1250mm	±5.0
1250 ~ 2500mm	±7.0
2500 ~ 5000mm	±10.0

MEMO

DIM. IN mm
SCALE 1 / 2
*Ø ___ ±Ø : WMS C 40201

DATE	2011.10.07	APPROVED
DRAWN	B.H.KANG	B.J.JONE
DESIGNED	-	
CHECKED	J.Y.LEE	

WOOJIN Industrial Systems Co., Ltd.

DENVER RTD FASTRACKS

JUMPER COUPLER PLUG

R1D1473-25868 b

APPROVED 2012.11.02 Hyundai Rotem Company

기호 MARK	일자 DATE	변경내역 DETAIL OF REVISION(E.C ZONE)	설변번호 E.C NO.	설계 DGN	검도 CHK	승인 APP
Dx1	2012.11.01	The supplier revised the dimemnsion of Item #2.	RNE1002-U144	Y.S.JEON	C.Y.LEE	S.H.PARK
Cx1	2012.03.15	The supplier revised the weight and Dim.		Y.S.JEON	C.Y.LEE	S.H.PARK
Bx1	2012.01.05	The supplier revised the painting spec.		Y.S.JEON	C.Y.LEE	S.H.PARK
Ax1	2011.10.25	The supplier revised the drawing for FDR		Y.S.JEON	C.Y.LEE	S.H.PARK

품번 NO.	부품 번호 PART NO.	품명 DESCRIPTION	재질 MATERIAL	수량 Q'TY	중량 W.T	비고 REMARKS

승인 APP	S.H.PARK 2011.03.25	재질 MAT'L	ASSY
검도 CHK	C.Y.LEE 2011.03.17	총중량 G.W	9.1 lbs
설계 DGN	Y.S.JEON 2011.03.11	일반공차 MC / WD / CT	B
제도 DRG		SIZE	C

TITLE 명칭 VIDEO JUMPER CABLE ASSEMBLY

도면 번호 DRG. NO MS REJ50001CT0 Ver. 00 Rev. -D

SCALE N/S 매수 SHEET 1 of 1

참고번호 REF. NO.

HYUNDAI Rotem 현대로템주식회사

RNE1002

년-PRJT

정리번호

CATIA

본 도면은 당사 재산으로서 허가없이 무단복사/배포 금지됨. PROPERTY OF ISSUING ENTITY. CANNOT BE DISTRIBUTED OR REPRODUCED WITHOUT AUTHORIZATION.

Hyundai Rotem 254096 2012-11-02 11:09
Hyundai Rotem|10.196.33.77|254096|2012-11-02 11:13:37

RELEASED 2012.11.02

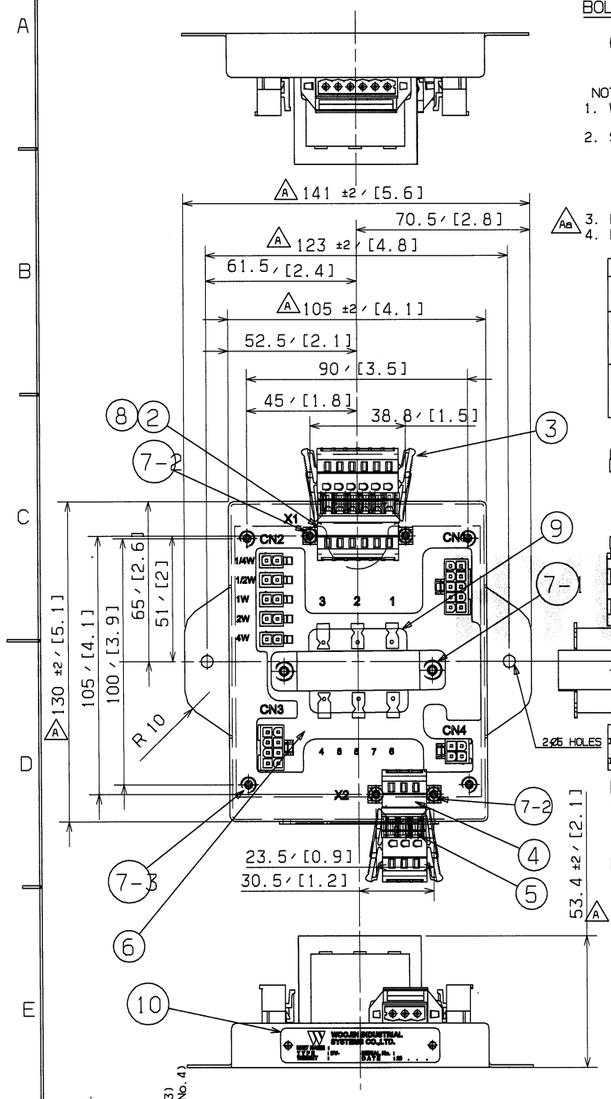

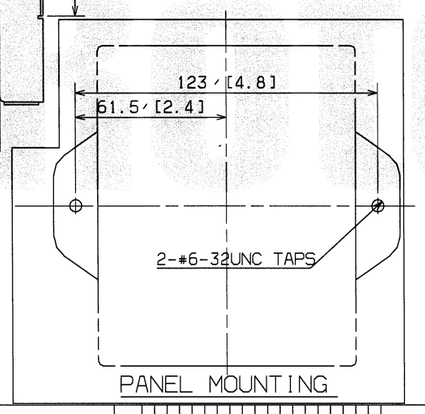

PANEL MOUNTING

BOLT TYPE DESCRIPTION

(7) — Item no.

NOTE.
1. WEIGHT : 0.54kg
2. SURFACE TREATMENT
   1) ITEM : NO. 1
      - COLOR : BLACK
      - COLOR CODE : UT-721N TOP N-1.5,G20
      - MAKER : PPG
3. DEFAULT RATING IS 4W
4. RED HEAT SHRINK TUBES ARE THE PRIMARY WIRES

NO.	TYPE	SIZE	Q'TY
7-1	ROUND HEAD BOLT	M4XL14	2
	SPRING WASHER	M4XØ5.8Xt1.0	
7-2	ROUND HEAD BOLT	M3XL14	4
	SPRING WASHER	M4XØ5.8Xt1.0	
	FLAT WASHER	M4XØ7.8Xt0.8	
7-3	SPRING WASHER	M3XØ5Xt0.8	4
	FLAT WASHER	M3XØ5.8Xt0.5	
	ROUND HEAD BOLT	M3XL8	

GROUP NO.	ITEM	DESCRIPTION	SPEC	DWG NO.				S/TREATMENT
1	1	BRACKET	A366-91, t1.2	R1D000416				PAINTING
1	2	CONNECTOR	231-606/019-000, WAGO					
1	3	CONNECTOR	231-106/037-000, WAGO					
1	4	CONNECTOR	231-603 /019-000, WAGO					
1	5	CONNECTOR	231-103 / 037-000, WAGO					
1	6	ISP BOARD	ASS'Y					
1	7	BOLT & NUT LIST	ASS'Y					
8	8	CORD-END TERMINALS	CE007506					
1	9	Transformer	WJ-ST-70V4W, SAMIK					
1	10	NAME LABEL	304SS,t0.5	R1D000452	-	18		
1	11	TRF WIRING DIAGRAM	ASS'Y	R1D000502				

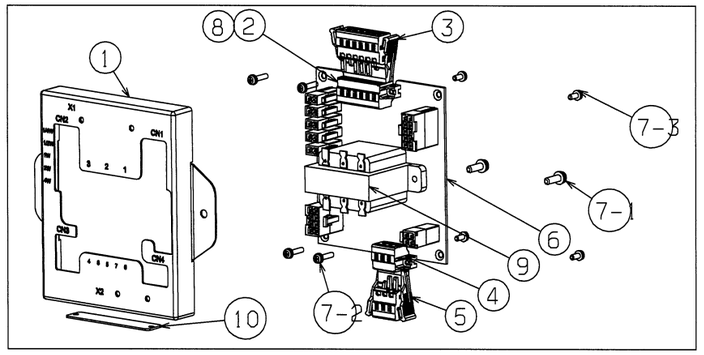

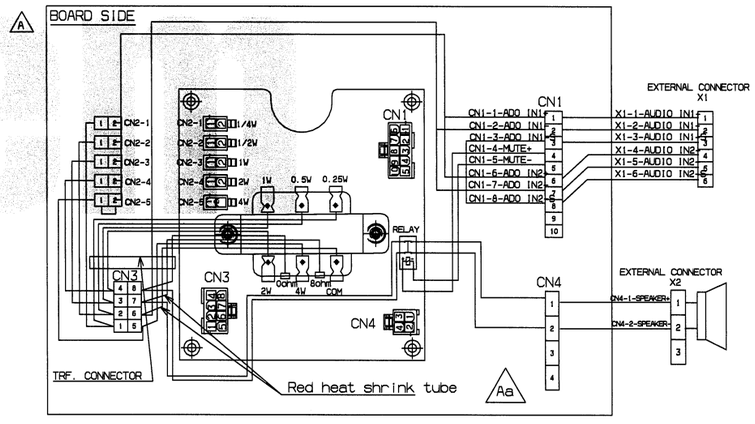

무게 WEIGHT(KG)	~ 40	2	4
	~ 30	2	3
	~ 10	1	1.5
	< 3	0.5	1
인장 TENSILE(kgf)	~3150	-	7
	~1600	4	5
	~ 800	3	4
	~ 400	2	3
	~ 200	1.5	2
	~ 100	1	1.5
등급 GRADE		A	B
주물 CASTING 치수공차 (±)	~ 20M	8	14	24
	~ 15M	7	12	21
	~ 12M	6	10	18
	~ 8M	5	8	14
	~ 4M	4	6	11
	~ 2M	3	4	8
	~ 1M	2	3	6
	~ 315	1	2	4
	~ 120	1	2	3
	~ 30	1	1	1
등급 GRADE		A	B	C
용접 WELDING 구조물 (±)	~ 20M	-	6.0	8.0
	~ 15M	-	5.0	7.0
	~ 12M	-	4.0	6.0
	~ 8M	-	3.0	5.0
	~ 4M	0.8	2.0	4.0
	~ 2M	0.5	1.2	3.0
	~ 1M	0.3	0.8	2.0
	~ 315	0.2	0.5	1.2
	~ 120	0.15	0.3	0.8
	~ 30	0.1	0.2	0.5
	3~6	0.05	0.1	0.2
등급 GRADE		A	B	C
기계 가공품 MACHINING (±) 규정되었은 일반공차표 GENERAL TOLERANCE			

CHANGE	DGN	APP	
1) Material(P/No.10) corrected. 2)Tolerance added. 3)Wiring diagram revised. 2012.03.12	H.YSHIN	B.J.JONE	A
Default rating added.(Note No.3) Shrink tube color added.(Note No.4) 2012.08.30	H.Y.SHIN	B.J.JONE	Aa

GENERAL TOLERANCE (WMS-C-40201)

DIMENSION	MACHING	WELDING	CASTING
0.5 ~ =6mm	±0.1	±0.3	
6 ~ =30mm	±0.2	±0.5	
30 ~ =120mm	±0.3	±0.8	
120 ~ =400mm	±0.5	±1.2	±2.0
400 ~ =1000mm	±0.8	±2.0	±2.5
1000 ~ =2000mm	±1.2	±3.0	±3.5
2000 ~ =4000mm	±2.0	±4.0	±4.0
4000 ~ =6000mm	±3.0	±5.0	±5.0
6000 ~ =8000mm	±4.0	±7.0	±7.0
8000 ~ =12500mm	±5.0	±9.0	±9.0
12500 ~ =25400mm	±7.0	±12.0	±9.0
DIMENSION			CASTING
~ =120mm			±2.0
120 ~ =315mm			±2.5
315 ~ =630mm			±3.5
630 ~ =1250mm			±4.0
1250 ~ =2500mm			±5.0
2500 ~ =5000mm			±10.0

MEMO

: WMS C 40201

WOOJIN Industrial Systems Co., Ltd.

DIM. IN mm	DATE	2011.07.10	APPROVED
SCALE	DRAWN	B.H.KANG	B. J. JONE
1 / 2	DESIGNED	-	
	CHECKED	J.Y.LEE	

DENVER RTD FASTRACKS

TRANSFORMER

R1D1473-25866 | A

APPROVED 2012.11.02 Hyundai Rotem Company

품번 NO.	부품 번호 PART NO.	품 명 DESCRIPTION	재 질 MATERIAL	수량 Q'TY	중량 W.T	비 고 REMARKS

Dx1	2012.10.08	The supplier added the default rating.	RNE1002-U144	Y.S.JEON	C.Y.LEE	S.H.PARK
Cx1	2012.03.15	The supplier revised the weight and Dim.		Y.S.JEON	C.Y.LEE	S.H.PARK
Bx1	2012.01.05	The supplier revised painting spec.		Y.S.JEON	C.Y.LEE	S.H.PARK
Ax1	2011.10.25	The supplier revised the drawing for FDR		Y.S.JEON	C.Y.LEE	S.H.PARK
기 호 MARK	일 자 DATE	변 경 내 역 DETAIL OF REVISION(E.C ZONE)	설변번호 E.C NO.	설계 DGN	검도 CHK	승인 APP

승인 APP	S.H.PARK 2011.03.25	제질 MAT'L ASSY	명 칭 TITLE: TRANSFORMER
검도 CHK	C.Y.LEE 2011.03.17	총중량 G.W 1.2 lbs	
설계 DGN	Y.S.JEON 2011.03.11	일반공차 MC WD CT: B	도면 번호 DRG. NO: RES11004CT0 MS; Ver. 00; Rev. -D; RNE1002
제도 DRG		SIZE C	SCALE N/S; 매수 SHEET 1 of 1

참고번호 REF. NO.

HYUNDAI Rotem 현대로템주식회사

년-PRJT 정리번호

본 도면은 당사 재산으로서, 허가없이 무단복사/배포 금지됨. PROPERTY OF ISSUING ENTITY. CANNOT BE DISTRIBUTED OR REPRODUCED WITHOUT AUTHORIZATION.

CATIA

Hyundai Rotem 254096 2012-11-02 11:40
Hyundai Rotem|10.198.33.77|254096|2012-11-02 11:41:06

NOTE

1. WEIGHT : 11.0kg
2. NON-ASSIGNED CONNECTOR SOCKETS/PINS SHOULD BE FILLED WITH SEALING PLUG. (SEALING PLUG : 10-3050456-16, GLENAIR)

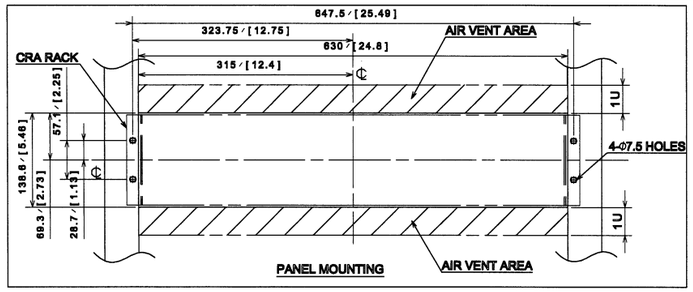

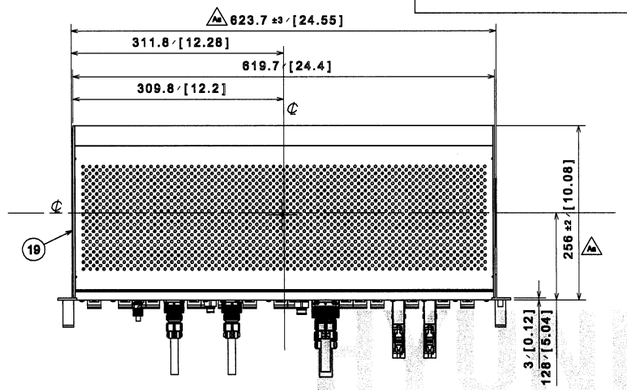

TOP VIEW
S=1:5

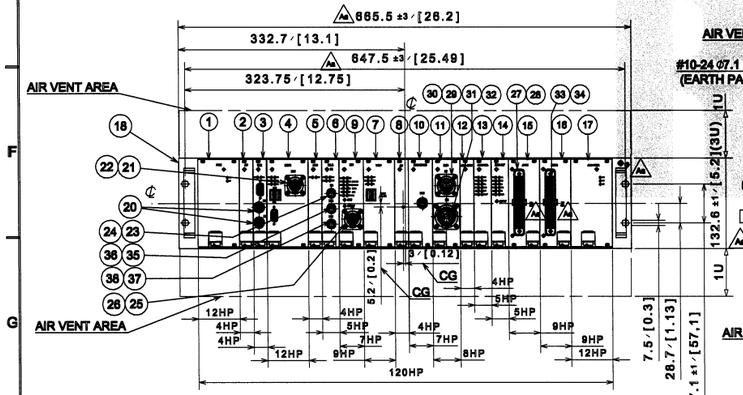

FRONT VIEW
S=1:5

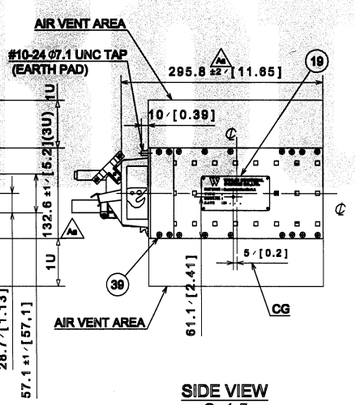

SIDE VIEW
S=1:5

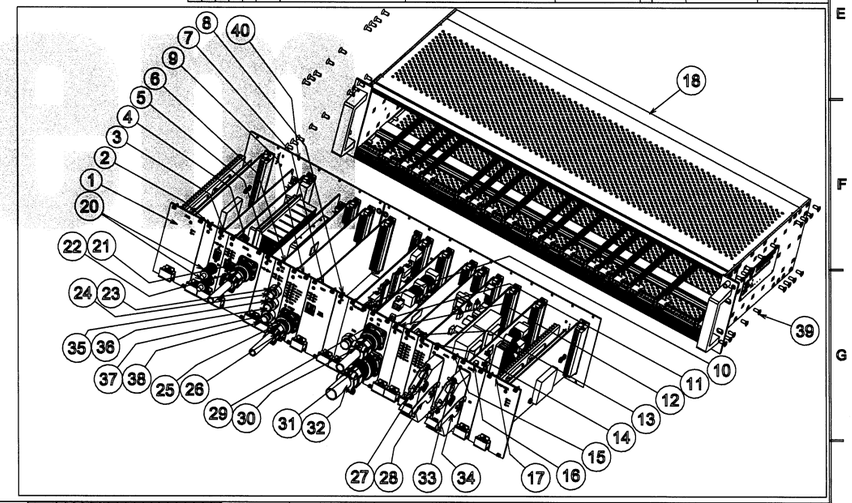

관번 GROUP NO.				품번 ITEM	품 명 DESCRIPTION	사 양 SPEC	도면번호 DWG NO.	-	품번 관번	생략, 길이 폭 x 길이	표면처리 도장, 도금색
			1	1	POWER SUPPLY	PWR,VICOR	R1D000283				
			1	2	SP(DEBUG 4HP)	SP,WIS	R1D000296				
			1	3	VIDEO TX BOARD	VTX,WIS	R1D000304				
			1	4	CNCS BOARD	CNCS,WIS	R1D000253				
			1	5	HARD DISK DRIVE ASSY	HDD,WIS	R1D000258				
			1	6	WLR BOARD	WLR,WIS	R1D000308				
			1	7	VOIP	VOIP,WIS	R1D000300				
			1	8	REC	REC,WIS	R1D000288				
			1	9	LIC BOARD	LIC,WIS	R1D000282				
			1	10	PAC 485 BOARD	PAC485,WIS	R1D000286				
			1	11	SCB BOARD	SCB,WIS	R1D000292				
			1	12	MCU BOARD	MCU,WIS	R1D000274				
			1	13	VOL	VOL,WIS	R1D000278				
			1	14	INT BOARD	INT,WIS	R1D000270				
			1	15	AAB1 BOARD	AAB1,WIS	R1D000242				
			1	16	AAB2 BOARD	AAB2,WIS	R1D000245				
			1	17	AAB POWER BOARD	AAB PWR,VICOR	R1D000249				
			1	18	21" RACK MOUNT CHASSIS ASSY	SCHROFF,120HP, WIS	R1D000237				
			2	19	NAME PLATE	AL	R1D000482	-	1		
			1	20	X8,X7 CONNECTOR	BCP-C5FA, CANARE					
			1	21	X15 CONNECTOR	FRIT84102R148-077B0G1F6/GLENAIR					
			1	22	X16 CONNECTOR	FRIT84100P148-078B0F0,ITB02T-14P3/GLENAIR					
			1	23	X9 CONNECTOR	801-010-07M7-35PA/GLENAIR					
			1	24	X9 CONNECTOR	801-007-16M7-35BA/GLENAIR					
			1	25	X3 CONNECTOR	FRIT84102R148-077B0G1F6/GLENAIR					
			1	26	X3 CONNECTOR	FRIT84100P148-078B0F6/GLENAIR					
			1	27	X4 CONNECTOR	M8G66RR-L111/BOURIAU					
			1	28	X4 CONNECTOR	M8G66/BOURIAU					
			1	29	X1 CONNECTOR	FRIT84102R168-1PB0G1F6/GLENAIR					
			1	30	X1 CONNECTOR	FRIT84100P168-1B0F6/GLENAIR					
			1	31	X2 CONNECTOR	FRIT84102R20-29PB0G1F6/GLENAIR					
			1	32	X2 CONNECTOR	FRIT84100P20-29B0F6/GLENAIR					
			1	33	X5 CONNECTOR	M8G66RR-L111/BOURIAU					
			1	34	X5 CONNECTOR	M8G66/BOURIAU					
			1	35	X10 CONNECTOR	801-010-07M7-35PB/GLENAIR					
			1	36	X10 CONNECTOR	801-007-16M7-35BB/GLENAIR					
			1	37	X11 CONNECTOR	801-010-07M7-35PC/GLENAIR					
			1	38	X11 CONNECTOR	801-007-16M7-35BC/GLENAIR					
			32	39	BOLT	FLAT HEAD SCREW M4X8					
			1	40	BACK PLANE	ASSY,WIS	R1D001044				

개정 CHANGE	
1)Dimension added. 2)Fig mark added. 3)CAB13-2x2-N/A, CAB13-2x2-N/B, CAB13-2x2-N/C, CAB13-2x2-N/D, CAB13-2x2-N/E, CAB13-2x2-N/F, CAB13-2x2-N/G, CAB13-2x2-N/H, CAB13-2x2-N/I, CAB13-2x2-N/J, CAB13-2x2-N/K, CAB13-2x2-N/L, CAB13-2x2-N/M, CAB13-2x2-N/N, CAB13-2x2-N/O, CAB13-2x2-N/P, CAB13-2x2-N/Q, CAB13-2x2-N/R, CAB13-2x2-N/S, CAB13-2x2-N/T, CAB13-2x2-N/U, CAB13-2x2-N/V, CAB13-2x2-N/W, CAB13-2x2-N/X, CAB13-2x2-N/Y, CAB13-2x2-N/Z, CAB13-2x2-N/AA, CAB13-2x2-N/AB, CAB13-2x2-N/AC, CAB13-2x2-N/AD, CAB13-2x2-N/AE, CAB13-2x2-N/AF, CAB13-2x2-N/AG, CAB13-2x2-N/AH, CAB13-2x2-N/AI, CAB13-2x2-N/AJ, CAB13-2x2-N/AK, CAB13-2x2-N/AL, CAB13-2x2-N/AM, CAB13-2x2-N/AN, CAB13-2x2-N/AO, CAB13-2x2-N/AP, CAB13-2x2-N/AQ, CAB13-2x2-N/AR, CAB13-2x2-N/AS, CAB13-2x2-N/AT, CAB13-2x2-N/AU, CAB13-2x2-N/AV, CAB13-2x2-N/AW, CAB13-2x2-N/AX, CAB13-2x2-N/AY, CAB13-2x2-N/AZ, CAB13-2x2-N/BA, CAB13-2x2-N/BB, CAB13-2x2-N/BC, CAB13-2x2-N/BD, CAB13-2x2-N/BE, CAB13-2x2-N/BF, CAB13-2x2-N/BG, CAB13-2x2-N/BH, CAB13-2x2-N/BI, CAB13-2x2-N/BJ, CAB13-2x2-N/BK, CAB13-2x2-N/BL, CAB13-2x2-N/BM, CAB13-2x2-N/BN, CAB13-2x2-N/BO, CAB13-2x2-N/BP, CAB13-2x2-N/BQ, CAB13-2x2-N/BR, CAB13-2x2-N/BS, CAB13-2x2-N/BT, CAB13-2x2-N/BU, CAB13-2x2-N/BV, CAB13-2x2-N/BW, CAB13-2x2-N/BX, CAB13-2x2-N/BY, CAB13-2x2-N/BZ, CAB13-2x2-N/CA, CAB13-2x2-N/CB, CAB13-2x2-N/CC, CAB13-2x2-N/CD, CAB13-2x2-N/CE, CAB13-2x2-N/CF, CAB13-2x2-N/CG, CAB13-2x2-N/CH, CAB13-2x2-N/CI, CAB13-2x2-N/CJ, CAB13-2x2-N/CK, CAB13-2x2-N/CL, CAB13-2x2-N/CM, CAB13-2x2-N/CN, CAB13-2x2-N/CO, CAB13-2x2-N/CP, CAB13-2x2-N/CQ, CAB13-2x2-N/CR, CAB13-2x2-N/CS, CAB13-2x2-N/CT, CAB13-2x2-N/CU, CAB13-2x2-N/CV, CAB13-2x2-N/CW, CAB13-2x2-N/CX, CAB13-2x2-N/CY, CAB13-2x2-N/CZ, CAB13-2x2-N/DA, CAB13-2x2-N/DB, CAB13-2x2-N/DC, CAB13-2x2-N/DD, CAB13-2x2-N/DE, CAB13-2x2-N/DF, CAB13-2x2-N/DG, CAB13-2x2-N/DH, CAB13-2x2-N/DI, CAB13-2x2-N/DJ, CAB13-2x2-N/DK, CAB13-2x2-N/DL, CAB13-2x2-N/DM, CAB13-2x2-N/DN, CAB13-2x2-N/DO, CAB13-2x2-N/DP, CAB13-2x2-N/DQ, CAB13-2x2-N/DR, CAB13-2x2-N/DS, CAB13-2x2-N/DT, CAB13-2x2-N/DU, CAB13-2x2-N/DV, CAB13-2x2-N/DW, CAB13-2x2-N/DX, CAB13-2x2-N/DY, CAB13-2x2-N/DZ, CAB13-2x2-N/EA, CAB13-2x2-N/EB, CAB13-2x2-N/EC, CAB13-2x2-N/ED, CAB13-2x2-N/EE, CAB13-2x2-N/EF, CAB13-2x2-N/EG, CAB13-2x2-N/EH, CAB13-2x2-N/EI, CAB13-2x2-N/EJ, CAB13-2x2-N/EK, CAB13-2x2-N/EL, CAB13-2x2-N/EM, CAB13-2x2-N/EN, CAB13-2x2-N/EO, CAB13-2x2-N/EP, CAB13-2x2-N/EQ, CAB13-2x2-N/ER, CAB13-2x2-N/ES, CAB13-2x2-N/ET, CAB13-2x2-N/EU, CAB13-2x2-N/EV, CAB13-2x2-N/EW, CAB13-2x2-N/EX, CAB13-2x2-N/EY, CAB13-2x2-N/EZ, CAB13-2x2-N/FA, CAB13-2x2-N/FB, CAB13-2x2-N/FC, CAB13-2x2-N/FD, CAB13-2x2-N/FE, CAB13-2x2-N/FF, CAB13-2x2-N/FG, CAB13-2x2-N/FH, CAB13-2x2-N/FI, CAB13-2x2-N/FJ, CAB13-2x2-N/FK, CAB13-2x2-N/FL, CAB13-2x2-N/FM, CAB13-2x2-N/FN, CAB13-2x2-N/FO, CAB13-2x2-N/FP, CAB13-2x2-N/FQ, CAB13-2x2-N/FR, CAB13-2x2-N/FS, CAB13-2x2-N/FT, CAB13-2x2-N/FU, CAB13-2x2-N/FV, CAB13-2x2-N/FW, CAB13-2x2-N/FX, CAB13-2x2-N/FY, CAB13-2x2-N/FZ, CAB13-2x2-N/GA, CAB13-2x2-N/GB, CAB13-2x2-N/GC, CAB13-2x2-N/GD, CAB13-2x2-N/GE, CAB13-2x2-N/GF, CAB13-2x2-N/GG, CAB13-2x2-N/GH, CAB13-2x2-N/GI, CAB13-2x2-N/GJ, CAB13-2x2-N/GK, CAB13-2x2-N/GL, CAB13-2x2-N/GM, CAB13-2x2-N/GN, CAB13-2x2-N/GO, CAB13-2x2-N/GP, CAB13-2x2-N/GQ, CAB13-2x2-N/GR, CAB13-2x2-N/GS, CAB13-2x2-N/GT, CAB13-2x2-N/GU, CAB13-2x2-N/GV, CAB13-2x2-N/GW, CAB13-2x2-N/GX, CAB13-2x2-N/GY, CAB13-2x2-N/GZ, CAB13-2x2-N/HA, CAB13-2x2-N/HB, CAB13-2x2-N/HC, CAB13-2x2-N/HD, CAB13-2x2-N/HE, CAB13-2x2-N/HF, CAB13-2x2-N/HG, CAB13-2x2-N/HH, CAB13-2x2-N/HI, CAB13-2x2-N/HJ, CAB13-2x2-N/HK, CAB13-2x2-N/HL, CAB13-2x2-N/HM, CAB13-2x2-N/HN, CAB13-2x2-N/HO, CAB13-2x2-N/HP, CAB13-2x2-N/HQ, CAB13-2x2-N/HR, CAB13-2x2-N/HS, CAB13-2x2-N/HT, CAB13-2x2-N/HU, CAB13-2x2-N/HV, CAB13-2x2-N/HW, CAB13-2x2-N/HX, CAB13-2x2-N/HY, CAB13-2x2-N/HZ, CAB13-2x2-N/IA, CAB13-2x2-N/IB, CAB13-2x2-N/IC, CAB13-2x2-N/ID, CAB13-2x2-N/IE, CAB13-2x2-N/IF, CAB13-2x2-N/IG, CAB13-2x2-N/IH, CAB13-2x2-N/II, CAB13-2x2-N/IJ, CAB13-2x2-N/IK, CAB13-2x2-N/IL, CAB13-2x2-N/IM, CAB13-2x2-N/IN, CAB13-2x2-N/IO, CAB13-2x2-N/IP, CAB13-2x2-N/IQ, CAB13-2x2-N/IR, CAB13-2x2-N/IS, CAB13-2x2-N/IT, CAB13-2x2-N/IU, CAB13-2x2-N/IV, CAB13-2x2-N/IW, CAB13-2x2-N/IX, CAB13-2x2-N/IY, CAB13-2x2-N/IZ, CAB13-2x2-N/JA, CAB13-2x2-N/JB, CAB13-2x2-N/JC, CAB13-2x2-N/JD, CAB13-2x2-N/JE, CAB13-2x2-N/JF, CAB13-2x2-N/JG, CAB13-2x2-N/JH, CAB13-2x2-N/JI, CAB13-2x2-N/JJ, CAB13-2x2-N/JK, CAB13-2x2-N/JL, CAB13-2x2-N/JM, CAB13-2x2-N/JN, CAB13-2x2-N/JO, CAB13-2x2-N/JP, CAB13-2x2-N/JQ, CAB13-2x2-N/JR, CAB13-2x2-N/JS, CAB13-2x2-N/JT, CAB13-2x2-N/JU, CAB13-2x2-N/JV, CAB13-2x2-N/JW, CAB13-2x2-N/JX, CAB13-2x2-N/JY, CAB13-2x2-N/JZ, CAB13-2x2-N/KA, CAB13-2x2-N/KB, CAB13-2x2-N/KC, CAB13-2x2-N/KD, CAB13-2x2-N/KE, CAB13-2x2-N/KF, CAB13-2x2-N/KG, CAB13-2x2-N/KH, CAB13-2x2-N/KI, CAB13-2x2-N/KJ, CAB13-2x2-N/KK, CAB13-2x2-N/KL, CAB13-2x2-N/KM, CAB13-2x2-N/KN, CAB13-2x2-N/KO, CAB13-2x2-N/KP, CAB13-2x2-N/KQ, CAB13-2x2-N/KR, CAB13-2x2-N/KS, CAB13-2x2-N/KT, CAB13-2x2-N/KU, CAB13-2x2-N/KV, CAB13-2x2-N/KW, CAB13-2x2-N/KX, CAB13-2x2-N/KY, CAB13-2x2-N/KZ, CAB13-2x2-N/LA, CAB13-2x2-N/LB, CAB13-2x2-N/LC, CAB13-2x2-N/LD, CAB13-2x2-N/LE, CAB13-2x2-N/LF, CAB13-2x2-N/LG, CAB13-2x2-N/LH, CAB13-2x2-N/LI, CAB13-2x2-N/LJ, CAB13-2x2-N/LK, CAB13-2x2-N/LL, CAB13-2x2-N/LM, CAB13-2x2-N/LN, CAB13-2x2-N/LO, CAB13-2x2-N/LP, CAB13-2x2-N/LQ, CAB13-2x2-N/LR, CAB13-2x2-N/LS, CAB13-2x2-N/LT, CAB13-2x2-N/LU, CAB13-2x2-N/LV, CAB13-2x2-N/LW, CAB13-2x2-N/LX, CAB13-2x2-N/LY, CAB13-2x2-N/LZ, CAB13-2x2-N/MA, CAB13-2x2-N/MB, CAB13-2x2-N/MC, CAB13-2x2-N/MD, CAB13-2x2-N/ME, CAB13-2x2-N/MF, CAB13-2x2-N/MG, CAB13-2x2-N/MH, CAB13-2x2-N/MI, CAB13-2x2-N/MJ, CAB13-2x2-N/MK, CAB13-2x2-N/ML, CAB13-2x2-N/MM, CAB13-2x2-N/MN, CAB13-2x2-N/MO, CAB13-2x2-N/MP, CAB13-2x2-N/MQ, CAB13-2x2-N/MR, CAB13-2x2-N/MS, CAB13-2x2-N/MT, CAB13-2x2-N/MU, CAB13-2x2-N/MV, CAB13-2x2-N/MW, CAB13-2x2-N/MX, CAB13-2x2-N/MY, CAB13-2x2-N/MZ, CAB13-2x2-N/NA, CAB13-2x2-N/NB, CAB13-2x2-N/NC, CAB13-2x2-N/ND, CAB13-2x2-N/NE, CAB13-2x2-N/NF, CAB13-2x2-N/NG, CAB13-2x2-N/NH, CAB13-2x2-N/NI, CAB13-2x2-N/NJ, CAB13-2x2-N/NK, CAB13-2x2-N/NL, CAB13-2x2-N/NM, CAB13-2x2-N/NN, CAB13-2x2-N/NO, CAB13-2x2-N/NP, CAB13-2x2-N/NQ, CAB13-2x2-N/NR, CAB13-2x2-N/NS, CAB13-2x2-N/NT, CAB13-2x2-N/NU, CAB13-2x2-N/NV, CAB13-2x2-N/NW, CAB13-2x2-N/NX, CAB13-2x2-N/NY, CAB13-2x2-N/NZ, CAB13-2x2-N/OA, CAB13-2x2-N/OB, CAB13-2x2-N/OC, CAB13-2x2-N/OD, CAB13-2x2-N/OE, CAB13-2x2-N/OF, CAB13-2x2-N/OG, CAB13-2x2-N/OH, CAB13-2x2-N/OI, CAB13-2x2-N/OJ, CAB13-2x2-N/OK, CAB13-2x2-N/OL, CAB13-2x2-N/OM, CAB13-2x2-N/ON, CAB13-2x2-N/OO, CAB13-2x2-N/OP, CAB13-2x2-N/OQ, CAB13-2x2-N/OR, CAB13-2x2-N/OS, CAB13-2x2-N/OT, CAB13-2x2-N/OU, CAB13-2x2-N/OV, CAB13-2x2-N/OW, CAB13-2x2-N/OX, CAB13-2x2-N/OY, CAB13-2x2-N/OZ, CAB13-2x2-N/PA, CAB13-2x2-N/PB, CAB13-2x2-N/PC, CAB13-2x2-N/PD, CAB13-2x2-N/PE, CAB13-2x2-N/PF, CAB13-2x2-N/PG, CAB13-2x2-N/PH, CAB13-2x2-N/PI, CAB13-2x2-N/PJ, CAB13-2x2-N/PK, CAB13-2x2-N/PL, CAB13-2x2-N/PM, CAB13-2x2-N/PN, CAB13-2x2-N/PO, CAB13-2x2-N/PP, CAB13-2x2-N/PQ, CAB13-2x2-N/PR, CAB13-2x2-N/PS, CAB13-2x2-N/PT, CAB13-2x2-N/PU, CAB13-2x2-N/PV, CAB13-2x2-N/PW, CAB13-2x2-N/PX, CAB13-2x2-N/PY, CAB13-2x2-N/PZ, CAB13-2x2-N/QA, CAB13-2x2-N/QB, CAB13-2x2-N/QC, CAB13-2x2-N/QD, CAB13-2x2-N/QE, CAB13-2x2-N/QF, CAB13-2x2-N/QG, CAB13-2x2-N/QH, CAB13-2x2-N/QI, CAB13-2x2-N/QJ, CAB13-2x2-N/QK, CAB13-2x2-N/QL, CAB13-2x2-N/QM, CAB13-2x2-N/QN, CAB13-2x2-N/QO, CAB13-2x2-N/QP, CAB13-2x2-N/QQ, CAB13-2x2-N/QR, CAB13-2x2-N/QS, CAB13-2x2-N/QT, CAB13-2x2-N/QU, CAB13-2x2-N/QV, CAB13-2x2-N/QW, CAB13-2x2-N/QX, CAB13-2x2-N/QY, CAB13-2x2-N/QZ, CAB13-2x2-N/RA, CAB13-2x2-N/RB, CAB13-2x2-N/RC, CAB13-2x2-N/RD, CAB13-2x2-N/RE, CAB13-2x2-N/RF, CAB13-2x2-N/RG, CAB13-2x2-N/RH, CAB13-2x2-N/RI, CAB13-2x2-N/RJ, CAB13-2x2-N/RK, CAB13-2x2-N/RL, CAB13-2x2-N/RM, CAB13-2x2-N/RN, CAB13-2x2-N/RO, CAB13-2x2-N/RP, CAB13-2x2-N/RQ, CAB13-2x2-N/RR, CAB13-2x2-N/RS, CAB13-2x2-N/RT, CAB13-2x2-N/RU, CAB13-2x2-N/RV, CAB13-2x2-N/RW, CAB13-2x2-N/RX, CAB13-2x2-N/RY, CAB13-2x2-N/RZ, CAB13-2x2-N/SA, CAB13-2x2-N/SB, CAB13-2x2-N/SC, CAB13-2x2-N/SD, CAB13-2x2-N/SE, CAB13-2x2-N/SF, CAB13-2x2-N/SG, CAB13-2x2-N/SH, CAB13-2x2-N/SI, CAB13-2x2-N/SJ, CAB13-2x2-N/SK, CAB13-2x2-N/SL, CAB13-2x2-N/SM, CAB13-2x2-N/SN, CAB13-2x2-N/SO, CAB13-2x2-N/SP, CAB13-2x2-N/SQ, CAB13-2x2-N/SR, CAB13-2x2-N/SS, CAB13-2x2-N/ST, CAB13-2x2-N/SU, CAB13-2x2-N/SV, CAB13-2x2-N/SW, CAB13-2x2-N/SX, CAB13-2x2-N/SY, CAB13-2x2-N/SZ, CAB13-2x2-N/TA, CAB13-2x2-N/TB, CAB13-2x2-N/TC, CAB13-2x2-N/TD, CAB13-2x2-N/TE, CAB13-2x2-N/TF, CAB13-2x2-N/TG, CAB13-2x2-N/TH, CAB13-2x2-N/TI, CAB13-2x2-N/TJ, CAB13-2x2-N/TK, CAB13-2x2-N/TL, CAB13-2x2-N/TM, CAB13-2x2-N/TN, CAB13-2x2-N/TO, CAB13-2x2-N/TP, CAB13-2x2-N/TQ, CAB13-2x2-N/TR, CAB13-2x2-N/TS, CAB13-2x2-N/TT, CAB13-2x2-N/TU, CAB13-2x2-N/TV, CAB13-2x2-N/TW, CAB13-2x2-N/TX, CAB13-2x2-N/TY, CAB13-2x2-N/TZ, CAB13-2x2-N/UA, CAB13-2x2-N/UB, CAB13-2x2-N/UC, CAB13-2x2-N/UD, CAB13-2x2-N/UE, CAB13-2x2-N/UF, CAB13-2x2-N/UG, CAB13-2x2-N/UH, CAB13-2x2-N/UI, CAB13-2x2-N/UJ, CAB13-2x2-N/UK, CAB13-2x2-N/UL, CAB13-2x2-N/UM, CAB13-2x2-N/UN, CAB13-2x2-N/UO, CAB13-2x2-N/UP, CAB13-2x2-N/UQ, CAB13-2x2-N/UR, CAB13-2x2-N/US, CAB13-2x2-N/UT, CAB13-2x2-N/UU, CAB13-2x2-N/UV, CAB13-2x2-N/UW, CAB13-2x2-N/UX, CAB13-2x2-N/UY, CAB13-2x2-N/UZ, CAB13-2x2-N/VA, CAB13-2x2-N/VB, CAB13-2x2-N/VC, CAB13-2x2-N/VD, CAB13-2x2-N/VE, CAB13-2x2-N/VF, CAB13-2x2-N/VG, CAB13-2x2-N/VH, CAB13-2x2-N/VI, CAB13-2x2-N/VJ, CAB13-2x2-N/VK, CAB13-2x2-N/VL, CAB13-2x2-N/VM, CAB13-2x2-N/VN, CAB13-2x2-N/VO, CAB13-2x2-N/VP, CAB13-2x2-N/VQ, CAB13-2x2-N/VR, CAB13-2x2-N/VS, CAB13-2x2-N/VT, CAB13-2x2-N/VU, CAB13-2x2-N/VV, CAB13-2x2-N/VW, CAB13-2x2-N/VX, CAB13-2x2-N/VY, CAB13-2x2-N/VZ, CAB13-2x2-N/WA, CAB13-2x2-N/WB, CAB13-2x2-N/WC, CAB13-2x2-N/WD, CAB13-2x2-N/WE, CAB13-2x2-N/WF, CAB13-2x2-N/WG, CAB13-2x2-N/WH, CAB13-2x2-N/WI, CAB13-2x2-N/WJ, CAB13-2x2-N/WK, CAB13-2x2-N/WL, CAB13-2x2-N/WM, CAB13-2x2-N/WN, CAB13-2x2-N/WO, CAB13-2x2-N/WP, CAB13-2x2-N/WQ, CAB13-2x2-N/WR, CAB13-2x2-N/WS, CAB13-2x2-N/WT, CAB13-2x2-N/WU, CAB13-2x2-N/WV, CAB13-2x2-N/WW, CAB13-2x2-N/WX, CAB13-2x2-N/WY, CAB13-2x2-N/WZ, CAB13-2x2-N/XA, CAB13-2x2-N/XB, CAB13-2x2-N/XC, CAB13-2x2-N/XD, CAB13-2x2-N/XE, CAB13-2x2-N/XF, CAB13-2x2-N/XG, CAB13-2x2-N/XH, CAB13-2x2-N/XI, CAB13-2x2-N/XJ, CAB13-2x2-N/XK, CAB13-2x2-N/XL, CAB13-2x2-N/XM, CAB13-2x2-N/XN, CAB13-2x2-N/XO, CAB13-2x2-N/XP, CAB13-2x2-N/XQ, CAB13-2x2-N/XR, CAB13-2x2-N/XS, CAB13-2x2-N/XT, CAB13-2x2-N/XU, CAB13-2x2-N/XV, CAB13-2x2-N/XW, CAB13-2x2-N/XX, CAB13-2x2-N/XY, CAB13-2x2-N/XZ, CAB13-2x2-N/YA, CAB13-2x2-N/YB, CAB13-2x2-N/YC, CAB13-2x2-N/YD, CAB13-2x2-N/YE, CAB13-2x2-N/YF, CAB13-2x2-N/YG, CAB13-2x2-N/YH, CAB13-2x2-N/YI, CAB13-2x2-N/YJ, CAB13-2x2-N/YK, CAB13-2x2-N/YL, CAB13-2x2-N/YM, CAB13-2x2-N/YN, CAB13-2x2-N/YO, CAB13-2x2-N/YP, CAB13-2x2-N/YQ, CAB13-2x2-N/YR, CAB13-2x2-N/YS, CAB13-2x2-N/YT, CAB13-2x2-N/YU, CAB13-2x2-N/YV, CAB13-2x2-N/YW, CAB13-2x2-N/YX, CAB13-2x2-N/YY, CAB13-2x2-N/YZ, CAB13-2x2-N/ZA, CAB13-2x2-N/ZB, CAB13-2x2-N/ZC, CAB13-2x2-N/ZD, CAB13-2x2-N/ZE, CAB13-2x2-N/ZF, CAB13-2x2-N/ZG, CAB13-2x2-N/ZH, CAB13-2x2-N/ZI, CAB13-2x2-N/ZJ, CAB13-2x2-N/ZK, CAB13-2x2-N/ZL, CAB13-2x2-N/ZM, CAB13-2x2-N/ZN, CAB13-2x2-N/ZO, CAB13-2x2-N/ZP, CAB13-2x2-N/ZQ, CAB13-2x2-N/ZR, CAB13-2x2-N/ZS, CAB13-2x2-N/ZT, CAB13-2x2-N/ZU, CAB13-2x2-N/ZV, CAB13-2x2-N/ZW, CAB13-2x2-N/ZX, CAB13-2x2-N/ZY, CAB13-2x2-N/ZZ, CAB13-2x2-N/AA, CAB13-2x2-N/AB, CAB13-2x2-N/AC, CAB13-2x2-N/AD, CAB13-2x2-N/AE, CAB13-2x2-N/AF, CAB13-2x2-N/AG, CAB13-2x2-N/AH, CAB13-2x2-N/AI, CAB13-2x2-N/AJ, CAB13-2x2-N/AK, CAB13-2x2-N/AL, CAB13-2x2-N/AM, CAB13-2x2-N/AN, CAB13-2x2-N/AO, CAB13-2x2-N/AP, CAB13-2x2-N/AQ, CAB13-2x2-N/AR, CAB13-2x2-N/AS, CAB13-2x2-N/AT, CAB13-2x2-N/AU, CAB13-2x2-N/AV, CAB13-2x2-N/AW, CAB13-2x2-N/AX, CAB13-2x2-N/AY, CAB13-2x2-N/AZ, CAB13-2x2-N/BA, CAB13-2x2-N/BB, CAB13-2x2-N/BC, CAB13-2x2-N/BD, CAB13-2x2-N/BE, CAB13-2x2-N/BF, CAB13-2x2-N/BG, CAB13-2x2-N/BH, CAB13-2x2-N/BI, CAB13-2x2-N/BJ, CAB13-2x2-N/BK, CAB13-2x2-N/BL, CAB13-2x2-N/BM, CAB13-2x2-N/BN, CAB13-2x2-N/BO, CAB13-2x2-N/BP, CAB13-2x2-N/BQ, CAB13-2x2-N/BR, CAB13-2x2-N/BS, CAB13-2x2-N/BT, CAB13-2x2-N/BU, CAB13-2x2-N/BV, CAB13-2x2-N/BW, CAB13-2x2-N/BX, CAB13-2x2-N/BY, CAB13-2x2-N/BZ, CAB13-2x2-N/CA, CAB13-2x2-N/CB, CAB13-2x2-N/CC, CAB13-2x2-N/CD, CAB13-2x2-N/CE, CAB13-2x2-N/CF, CAB13-2x2-N/CG, CAB13-2x2-N/CH, CAB13-2x2-N/CI, CAB13-2x2-N/CJ, CAB13-2x2-N/CK, CAB13-2x2-N/CL, CAB13-2x2-N/CM, CAB13-2x2-N/CN, CAB13-2x2-N/CO, CAB13-2x2-N/CP, CAB13-2x2-N/CQ, CAB13-2x2-N/CR, CAB13-2x2-N/CS, CAB13-2x2-N/CT, CAB13-2x2-N/CU, CAB13-2x2-N/CV, CAB13-2x2-N/CW, CAB13-2x2-N/CX, CAB13-2x2-N/CY, CAB13-2x2-N/CZ, CAB13-2x2-N/DA, CAB13-2x2-N/DB, CAB13-2x2-N/DC, CAB13-2x2-N/DD, CAB13-2x2-N/DE, CAB13-2x2-N/DF, CAB13-2x2-N/DG, CAB13-2x2-N/DH, CAB13-2x2-N/DI, CAB13-2x2-N/DJ, CAB13-2x2-N/DK, CAB13-2x2-N/DL, CAB13-2x2-N/DM, CAB13-2x2-N/DN, CAB13-2x2-N/DO, CAB13-2x2-N/DP, CAB13-2x2-N/DQ, CAB13-2x2-N/DR, CAB13-2x2-N/DS, CAB13-2x2-N/DT, CAB13-2x2-N/DU, CAB13-2x2-N/DV, CAB13-2x2-N/DW, CAB13-2x2-N/DX, CAB13-2x2-N/DY, CAB13-2x2-N/DZ, CAB13-2x2-N/EA, CAB13-2x2-N/EB, CAB13-2x2-N/EC, CAB13-2x2-N/ED, CAB13-2x2-N/EE, CAB13-2x2-N/EF, CAB13-2x2-N/EG, CAB13-2x2-N/EH, CAB13-2x2-N/EI, CAB13-2x2-N/EJ, CAB13-2x2-N/EK, CAB13-2x2-N/EL, CAB13-2x2-N/EM, CAB13-2x2-N/EN, CAB13-2x2-N/EO, CAB13-2x2-N/EP, CAB13-2x2-N/EQ, CAB13-2x2-N/ER, CAB13-2x2-N/ES, CAB13-2x2-N/ET, CAB13-2x2-N/EU, CAB13-2x2-N/EV, CAB13-2x2-N/EW, CAB13-2x2-N/EX, CAB13-2x2-N/EY, CAB13-2x2-N/EZ, CAB13-2x2-N/FA, CAB13-2x2-N/FB, CAB13-2x2-N/FC, CAB13-2x2-N/FD, CAB13-2x2-N/FE, CAB13-2x2-N/FF, CAB13-2x2-N/FG, CAB13-2x2-N/FH, CAB13-2x2-N/FI, CAB13-2x2-N/FJ, CAB13-2x2-N/FK, CAB13-2x2-N/FL, CAB13-2x2-N/FM, CAB13-2x2-N/FN, CAB13-2x2-N/FO, CAB13-2x2-N/FP, CAB13-2x2-N/FQ, CAB13-2x2-N/FR, CAB13-2x2-N/FS, CAB13-2x2-N/FT, CAB13-2x2-N/FU, CAB13-2x2-N/FV, CAB13-2x2-N/FW, CAB13-2x2-N/FX, CAB13-2x2-N/FY, CAB13-2x2-N/FZ, CAB13-2x2-N/GA, CAB13-2x2-N/GB, CAB13-2x2-N/GC, CAB13-2x2-N/GD, CAB13-2x2-N/GE, CAB13-2x2-N/GF, CAB13-2x2-N/GG, CAB13-2x2-N/GH, CAB13-2x2-N/GI, CAB13-2x2-N/GJ, CAB13-2x2-N/GK, CAB13-2x2-N/GL, CAB13-2x2-N/GM, CAB13-2x2-N/GN, CAB13-2x2-N/GO, CAB13-2x2-N/GP, CAB13-2x2-N/GQ, CAB13-2x2-N/GR, CAB13-2x2-N/GS, CAB13-2x2-N/GT, CAB13-2x2-N/GU, CAB13-2x2-N/GV, CAB13-2x2-N/GW, CAB13-2x2-N/GX, CAB13-2x2-N/GY, CAB13-2x2-N/GZ, CAB13-2x2-N/HA, CAB13-2x2-N/HB, CAB13-2x2-N/HC, CAB13-2x2-N/HD, CAB13-2x2-N/HE, CAB13-2x2-N/HF, CAB13-2x2-N/HG, CAB13-2x2-N/HH, CAB13-2x2-N/HI, CAB13-2x2-N/HJ, CAB13-2x2-N/HK, CAB13-2x2-N/HL, CAB13-2x2-N/HM, CAB13-2x2-N/HN, CAB13-2x2-N/HO, CAB13-2x2-N/HP, CAB13-2x2-N/HQ, CAB13-2x2-N/HR, CAB13-2x2-N/HS, CAB13-2x2-N/HT, CAB13-2x2-N/HU, CAB13-2x2-N/HV, CAB13-2x2-N/HW, CAB13-2x2-N/HX, CAB13-2x2-N/HY, CAB13-2x2-N/HZ, CAB13-2x2-N/IA, CAB13-2x2-N/IB, CAB13-2x2-N/IC, CAB13-2x2-N/ID, CAB13-2x2-N/IE, CAB13-2x2-N/IF, CAB13-2x2-N/IG, CAB13-2x2-N/IH, CAB13-2x2-N/II, CAB13-2x2-N/IJ, CAB13-2x2-N/IK, CAB13-2x2-N/IL, CAB13-2x2-N/IM, CAB13-2x2-N/IN, CAB13-2x2-N/IO, CAB13-2x2-N/IP, CAB13-2x2-N/IQ, CAB13-2x2-N/IR, CAB13-2x2-N/IS, CAB13-2x2-N/IT, CAB13-2x2-N/IU, CAB13-2x2-N/IV, CAB13-2x2-N/IW, CAB13-2x2-N/IX, CAB13-2x2-N/IY,

RELEASED 2012.11.02

GROUP NO.	ITEM	DESCRIPTION	SPEC	DWG NO.	WEIGHT	SURFACE TREATMENT
	1					

X1:PIN ASSIGNMENT
FRITS4102R16S-1PB0G1F6

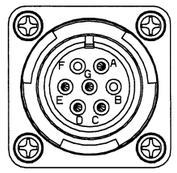

NO.	X1
A	POWER-VCC
B	NC
C	ADD1
D	ADD2
E	POWER-GND
F	NC
G	ADD-GND

X2:PIN ASSIGNMENT
FRITS4102R20-29PB0G1F6

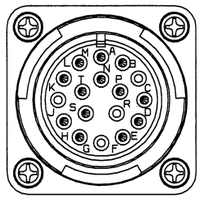

NO.	ITEM
A	FORWARD+
B	ALL DOOR CLOSED+
C	NC
D	CAB KEY ON+
E	KEY GND
F	CONDUCT KEY ON+
G	NC
H	ODOMETER-
J	ODOMETER+
K	NC
L	~~EMB VCC(24V)~~ NC
M	~~EMB VCC GND~~ NC
N	REVERSE+
P	GND
R	NC
S	UNCOUPLE+
T	~~NC~~ CRA fault 37.5V

X3:PIN ASSIGNMENT
FRITS4102R14S-07PB0G1F6

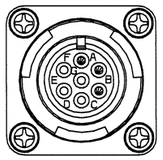

NO.	X3
A	N1+
B	N1-
C	N1 SHIELD
D	NC.
E	NC.
F	NC.
G	NC.

X15:PIN ASSIGNMENT
FRITS4102R14S-07PB0G1F6

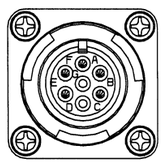

NO.	X15
A	TD
B	RD
C	SHIELD
D	NC.
E	~~DC +5V OUT~~ NC
F	~~DC GND OUT~~ NC
G	NC.

X5
~~X4~~:PIN ASSIGNMENT
MSG59RR-L111

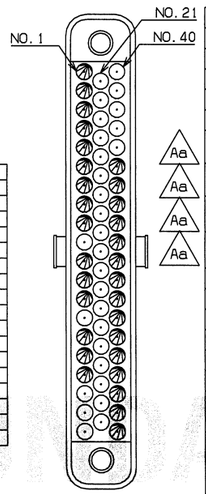

NO.	ITEM	NO.	ITEM
1	PEI LIVE-ADD GND	31	
2	PEI1 LIVE-ADD	32	
3	PEI2 LIVE-ADD	33	
4	PEI3 LIVE-ADD	34	
5	PEI4 LIVE-ADD	35	
6	~~PEI5 LIVE-ADD~~ CAB KEY ON MA ~~CRA~~	36	
7	~~PEI6 LIVE-ADD~~ CAB KEY ON MB ~~CRB~~	37	
8	~~PEI7 LIVE-ADD~~ UNCOUPLE MA ~~CRA~~	38	
9	~~PEI8 LIVE-ADD~~ UNCOUPLE MB ~~CRB~~	39	
10		40	ARr 37.5V
11	DPO LIVE-ADD1	41	
12	DPO LIVE-ADD2	42	
13	DPO LIVE-ADD GND	43	
14		44	
15	DPH LIVE-ADD1	45	AUDIO1 SH
16	DPH LIVE-ADD2	46	AUDIO1+
17	DPH LIVE-ADD GND	47	AUDIO1-
18		48	AUDIO2 SH
19		49	AUDIO2+
20		50	AUDIO2-
21		51	AUDIO3 SH
22		52	AUDIO3+
23		53	AUDIO3-
24		54	AUDIO4 SH
25		55	AUDIO4+
26		56	AUDIO4-
27		57	AUDIO5 SH
28		58	AUDIO5+
29		59	AUDIO5-
30			

X4
~~X5~~:PIN ASSIGNMENT
MSG59RR-L111

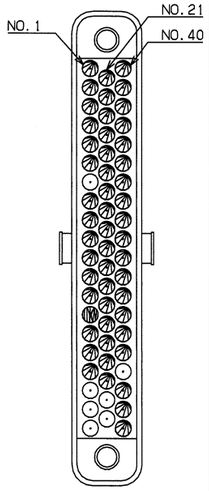

NO.	ITEM	NO.	ITEM
1	PA AUDIO TL1+	31	PA ContorDI1 TL2
2	PA AUDIO TL1-	32	PA ContorDI2 TL2
3	PA AUDIO TL SH	33	PA ContorDI3 TL2
4	PA AUDIO TL2+	34	PA ContorDI SH TL2
5	PA AUDIO TL2-	35	PA AUDIO+
6	PA AUDIO TL2 SH	36	PA AUDIO-
7		37	PA AUDIO SH
8	PEI AUDIO TL1 RX+	38	
9	PEI AUDIO TL1 RX-	39	
10	PEI AUDIO TL1 SH	40	PEI AUDIO RX+
11	PEI AUDIO TL1 TX+	41	PEI AUDIO RX-
12	PEI AUDIO TL1 TX-	42	PEI AUDIO SH
13	PEI AUDIO TL2 RX+	43	PEI AUDIO TX+
14	PEI AUDIO TL2 RX-	44	PEI AUDIO TX-
15	PEI AUDIO TL2 SH	45	DUAL TONE +
16	PEI AUDIO TL2 TX+	46	DUAL TONE -
17	PEI AUDIO TL2 TX-	47	DUAL TONE SH
18		48	ANSN +
19		49	ANSN -
20		50	ANSN SH
21	DUAL TONE TL1+	51	OCC AUDIO RX+
22	DUAL TONE TL1-	52	OCC AUDIO RX-
23	DUAL TONE TL1 SH	53	OCC AUDIO SH
24	DUAL TONE TL2+	54	OCC AUDIO TX+
25	DUAL TONE TL2-	55	OCC AUDIO TX-
26	DUAL TONE TL2 SH	56	
27	PA ContorDI1 TL1	57	~~EMB MIC+~~
28	PA ContorDI2 TL1	58	~~EMB MIC-~~
29	PA ContorDI3 TL1	59	~~EMB SHIELD~~
30	PA ContorDI SH TL1		

X16:PIN ASSIGNMENT
801-009-07M9-210PA

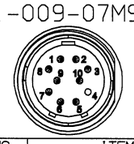

NO.	ITEM
1	TX1+
2	TX1-
3	TX1 SH
4	
5	RS485 TL1+
6	RS485 TL1-
7	RS485 TL SH
8	RS485 TL2+
9	RS485 TL2-
10	RS485 TL2 SH

X9:PIN ASSIGNMENT
801-010-07M7-25PA

NO.	ITEM
1A	RX+
2B	RX-
3C	TX+
4D	TX-
5E	~~GND~~

X10:PIN ASSIGNMENT
801-010-07M7-25PB

NO.	ITEM
1A	RX+
2B	RX-
3C	TX+
4D	TX-
5E	~~GND~~

X11:PIN ASSIGNMENT
801-010-07M7-25PC

NO.	ITEM
1A	RX+
2B	RX-
3C	TX+
4D	TX-
5E	~~GND~~

X6/X7 : BNC CONNECTOR

PIN NO.	REMARK
CENTER	VIDEO OUT
SHIELD	GND

등급 GRADE		A	B
주조 CASTING	규격, 구분용 (±)		
	~ 40	2	4
	~ 30	2	3
	~ 10	1	1.5
	< 3	0.5	1
인장 TENSILE	~3150	-	7
	~1600	4	5
	~ 800	3	4
	~ 400	2	3
	~ 200	1.5	2
	~ 100	1	1.5

등급 GRADE		A	B	C
용접 WELDING	구조물 (±)			
	~20M	8	14	24
	~15M	7	12	21
	~12M	6	10	18
	~ 8M	5	8	14
	~ 4M	4	6	11
	~ 2M	3	4	8
	~ 1M	2	3	6
	~315	1	2	4
	~120	1	2	3
	~ 30	1	1	1

등급 GRADE		A	B	C
용접 WELDING	구조물 (±)			
	~20M	-	6.0	8.0
	~15M	-	5.0	7.0
	~12M	-	4.0	6.0
	~ 8M	-	3.0	5.0
	~ 4M	0.8	2.0	4.0
	~ 2M	0.5	1.2	3.0
	~ 1M	0.3	0.8	2.0
	~315	0.2	0.5	1.2
	~120	0.15	0.3	0.8
	~ 30	0.1	0.2	0.5
	3~6	0.05	0.1	0.2
등급 GRADE		A	B	C
기계 가공용 MACHINING	(±)			
규격치않은 일반공차표 GENERAL TOLERANCE				

MARK	DATE	DETAIL OF REVISION(E.C ZONE)	설변번호 E.C NO.	설계 DGN	검도 CHK	승인 APP
Dx1	2012.11.01	The supplier corrected pin assignment.	RNE1002-U144	Y.S.JEON	C.Y.LEE	S.H.PARK
Cx1	2012.03.15	The supplier corrected Connector Number.		Y.S.JEON	C.Y.LEE	S.H.PARK
Bx1	2012.01.05	The supplier revised the drawing format.		Y.S.JEON	C.Y.LEE	S.H.PARK
Ax1	2011.10.25	The supplier revised the drawing for FDR		Y.S.JEON	C.Y.LEE	S.H.PARK

MARK	DATE	DESCRIPTION	DGN	CHK	APP
1	2012.03.12	1)Connector No. revised. 2)X15 pin assignment changed. 3)X2 pin assignment changed. 4)X4&X5 pin assignment changed.	H.YSHIN	B.J.JONE	Ab
0	2012.10.23	1) Pin No. corrected. 2)X5 Item names changed.	H.YSHIN	B.J.JONE	Ab

GENERAL TOLERANCE (WMS-C-40201)

DIMENSION	MACHING	WELDING	CASTING
0.5 ~ 6mm	±0.1	±0.3	
6 ~ 30mm	±0.2	±0.5	
30 ~ 120mm	±0.3	±0.8	
120 ~ 400mm	±0.5	±1.2	
400 ~ 1000mm	±0.8	±2.0	
1000 ~ 2000mm	±1.2	±3.0	
2000 ~ 4000mm	±2.0	±4.0	
4000 ~ 5000mm	±3.0	±5.0	
5000 ~ 8000mm	±4.0	±7.0	
8000 ~ 12000mm	±5.0	±9.0	
12000 ~ 20000mm	±7.0	±12.0	
20000 ~	±8.0	±15.0	
DIMENSION			CASTING
~ 120mm			±2.0
120 ~ 315mm			±2.5
315 ~ 630mm			±3.5
630 ~ 1250mm			±5.0
1250 ~ 2500mm			±7.0
2500 ~			±10.0

MEMO

DIM. IN mm
SCALE 1 / 1

WOOJIN Industrial Systems Co., Ltd.

DATE	2011.10.07	APPROVED
DRAWN	B.H.KANG	B.J.JONE
DESIGNED	-	
CHECKED	J.Y.LEE	

DENVER RTD FASTRACKS

COMMUNICATION RACK-A 2/2

R1D1473-25838 Ab

APPROVED 2012.11.02 Hyundai Rotem Company

품번 NO.	부품 번호 PART NO.	품명 DESCRIPTION	재질 MATERIAL	수량 Q'TY	중량 W.T	비고 REMARKS
승인 APP	S.H.PARK 2011.03.25	재질 MAT'L ASSY				
검도 CHK	C.Y.LEE 2011.03.17	총중량 G.W 25.1 lbs				
설계 DGN	Y.S.JEON 2011.03.11	일반공차 MC WD CT B				
제도 DRG		SIZE C				

명칭 TITLE: COMMUNICATION RACK A

도면 번호 DRG. NO: RES13001CT0 Ver. 00 Rev. -D

SCALE N/S 매수 SHEET 2 of 2

참고번호 REF. NO.

HYUNDAI Rotem 현대로템주식회사

RNE1002 년-PRJT 정리번호

본 도면은 당사 재산으로서 허가없이 무단복사/배포 금지함. PROPERTY OF ISSUING ENTITY. CANNOT BE DISTRIBUTED OR REPRODUCED WITHOUT AUTHORIZATION.

CATIA

Hyundai Rotem 254096 2012-11-02 11:10
Hyundai Rotem|10.196.33.77|254096|2012-11-02 11:16:49

RELEASED 2012.11.02

NOTE.
1. Non-assigned connector should be filled with plug & socket pins.

TECHNICAL DATA:

1. OPERATING VOLTAGE: DC 24 ~ 48V
2. CURRENT CONSUMPTION: 1A
3. INTERFACE: RS 485
4. COLOR FRONT FRAME: RAL 9005 (BLACK)
5. DISPLAY: CLAA070LD0ACW/CHUNGHWA ~~SAMSUNG LMS700KF05(7")~~
6. NUMBER OF PIXELS: 800x480
7. ACTIVE AREA: 152.4mm[6]x91.4mm[3.6]
8. COLORS: 262k
9. BRIGHTNESS: 450cd/m²
10. CONTRAST RATIO: 250 : 1
11. WEIGHT: ~~1.6~~ 2.0kg
12. SURFACE TREATMENT
 1) ITEM: NO.1,2,3,4
 - COLOR: BLACK
 - COLOR CODE: UT-721N TOP N-1.5,G20
 - MAKER: PPG

BOLT TYPE DESCRIPTION

(11) — Item no.

NO.	TYPE	SIZE	Q'TY
11-1	FLAT HEAD BOLT	M3XL8	16
11-2	ROUND HEAD BOLT	M3XL8	4
	SPRING WASHER	M3X25Xt0.8	
	FLAT WASHER	M3X25.8Xt0.5	
11-3	ROUND HEAD BOLT	M3XL14	8 4
	SPRING WASHER	M3X25Xt0.8	
	FLAT WASHER	M3X25.8Xt0.5	
11-4	ROUND HEAD BOLT	M3XL10	6
	SPRING WASHER	M3X25Xt0.8	
	FLAT WASHER	M3X25.8Xt0.5	
	~~FLAT WASHER~~	~~M3X27.8Xt0.5~~	
11-5	NUT	M3	
	SPRING WASHER	M3X25Xt0.8	
	FLAT WASHER	M3X25.8Xt0.5	

X1: CONNECTOR PIN ASSIGMENT
ITH03FPA22-14PB0G1F6

NO.	ITEM
A	POWER VCC
B	NC
C	POWER GND
D	NC
E	TX1+(in)
F	TX1-(in)
G	TX1 SH(in)
H	NC
J	NC
K	NC
L	NC
M	CAB ON+
N	CONDUCTOR KEY ON+
P	DI GND
R	NC
S	NC
T	ADD 1
U	ADD 2
V	ADD GND

EMC TAPE LENGTH DESCRIPTION

(13)-341mm — LENGTH, ITEM NO.

±_Ø GROUP NO.	_°_Ø ITEM	_° DESCRIPTION	SPEC	DWG NO.	_°_Ø ±_Ø	_°_ . ± Ø x ±_	S/TREATMENT
1	1	FRONT PANEL	AL(A6061)	R1D000315			PAINTING
1	2	UPPER COVER	A591-CQ, t1	R1D000318			PAINTING
1	3	REAR COVER	A591-CQ, t1.6	R1D000455			PAINTING
1	4	FRAME	A366-91, t=1.0	R1D000454			PAINTING
1	5	TFT-LCD UNIT	CLAA070LD0ACW/CHUNGHWA				
1	6	POWER CONVERTER BOARD	CCP-PCB 12V50W, WIS	R1D000316			
1	7	CCP CONTROL BOARD	CCP-CB, WIS	R1D000313			
1	8	CONNECTOR	ITH03FPA22-14PB0G1F6 /GLENAIR				
1	9	CONNECTOR	ITH08F22-14SB0F6 /GLENAIR				
1	10	NAME PLATE	AL, t=1	R1D000452	- 02		
1	11	BOLT & NUT LIST	ASS'Y				
3 2	12	WIRE MESH	DUST FILTER ϕ25, MYUNG-JIN ELECTRONICS				
4	13	EMC GASKET	SF050010R-C-NA-A, E-Song				
1	14	TOUCH SCREEN UNIT	M070ZA-AA/Meere dp ~~MN070000ACD, 7" Wide, CAZMUS~~				
1	15	SPEAKER	HSP-1710-8, HANICS TECHNOLOGY				
1	16	D/L BOARD	ASS'Y	R1D000314			
1	17	CR FORM SHEET	CR FORM, EPDM, t=2.0	R1D000453			
1	18	LCD BRACKET	A366-91, t=1.0	R1D000460			Zn PLATING
1	19	CAPTIVE SCREW	F5-M4-P2, SOUTHCO				

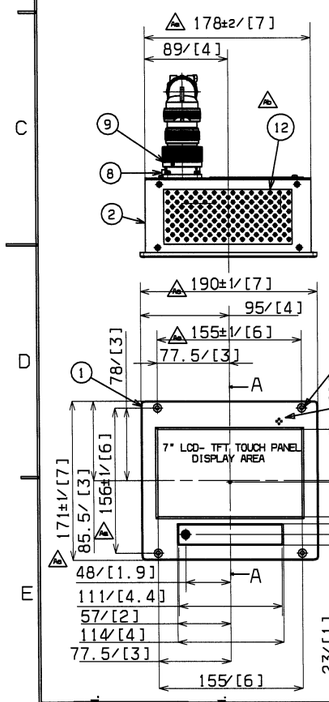

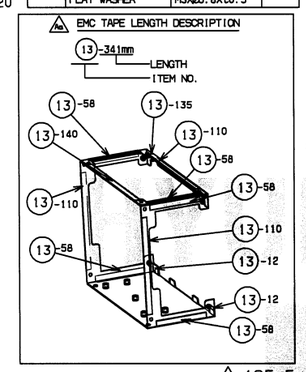

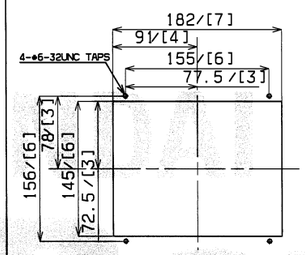

CUTOUT FOR INSTALLATION

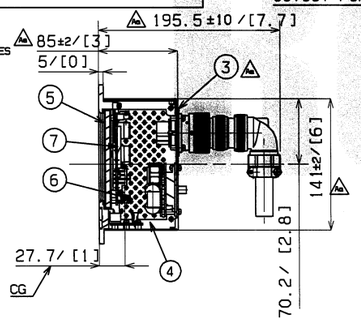

Section view A-A

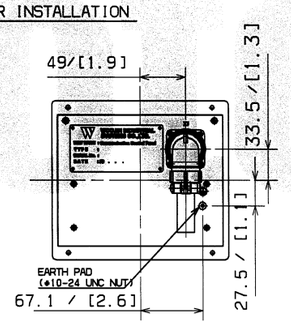

Auxiliary view B
Scale: 1:5

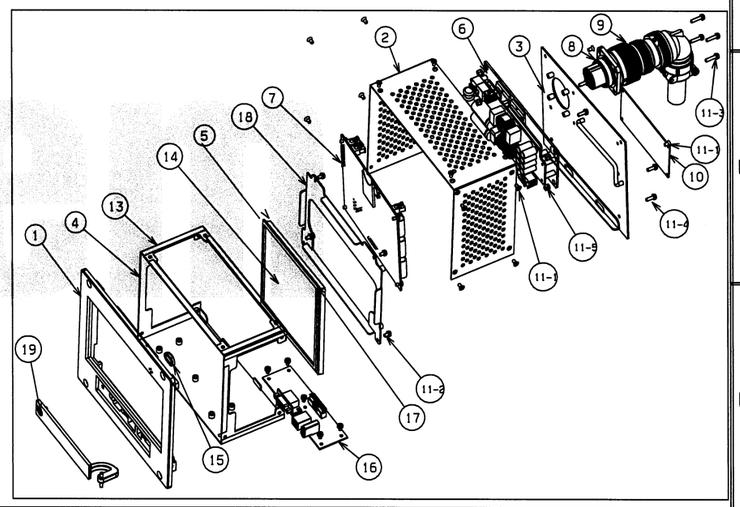

CHANGE			
1)Weight changed. 2)EMC gasket length changed. 3)Bolt Q'TY changed. 4) P/No.3 corrected. 5)Tolerance added.	2012.03.12	B.J.JONE	Ab
1)P/No.12 corrected. 2) P/No. 5 Spec. corrected. 3) P/No. 14 Spec. corrected.	2012.10.23	B.J.JONE	Ab

GENERAL TOLERANCE (WMS-C-4020)

DIMENSION	MACHINING	WELDING	CASTING
0.5 ~ 6mm	±0.1	±0.3	±0.5
6 ~ 30mm	±0.2	±0.5	±0.8
30 ~ 120mm	±0.3	±0.8	±1.2
120 ~ 400mm	±0.5	±1.2	±2.0
400 ~ 1000mm	±0.8	±2.0	±3.0
1000 ~ 2000mm	±1.2	±3.0	±4.0
2000 ~ 4000mm	±2.0	±4.0	±5.0
4000 ~ 8000mm	±3.0	±5.0	±7.0
8000 ~ 12000mm	±4.0	±7.0	±10.0
12000 ~ 16000mm	±5.0	±10.0	±15.0
DIMENSION	CASTING		
~ 120mm	±2.0		
120 ~ 315mm	±2.5		
315 ~ 630mm	±3.5		
630 ~ 1250mm	±5.0		
1250 ~ 2500mm	±7.0		
2500 ~ 5000mm	±10.0		

_°_MEMO

*Ø_ ___ ±_Ø : WMS C 4020

DIM. IN mm	DATE	2011.10.07	APPROVED
SCALE 1 / 5	DRAWN	B.H.KANG	B. J. JONE
	DESIGNED	-	
	CHECKED	J.Y.LEE	

WOOJIN Industrial Systems Co., Ltd.

DENVER RTD FASTRACKS

COMMUNICATION CONTROL PANEL

R1D1473-25842 Ab

기호 MARK	일자 DATE	변경내역 DETAIL OF REVISION(E.C ZONE)	설변번호 E.C NO.	설계 DGN	검도 CHK	승인 APP	기호 MARK	일자 DATE	변경내역 DETAIL OF REVISION(E.C ZONE)	설변번호 E.C NO.	설계 DGN	검도 CHK	승인 APP
Dx1	2012.11.01	The supplier revised technical data.	RNE1002-U144	Y.S.JEON	C.Y.LEE	S.H.PARK							
Cx1	2012.03.15	The supplier revised the weight and Dim.		Y.S.JEON	C.Y.LEE	S.H.PARK							
Bx1	2012.01.05	The supplier revised painting spec.		Y.S.JEON	C.Y.LEE	S.H.PARK							
Ax1	2011.10.25	The supplier revised the drawing for FDR		Y.S.JEON	C.Y.LEE	S.H.PARK							

품번 NO.	부품 번호 PART NO.	품명 DESCRIPTION	재질 MATERIAL	수량 Q'TY	중량 W.T	비고 REMARKS
승인 APP	S.H.PARK 2011.03.25	제목 TITLE: COMMUNICATION CONTROL PANEL	MAT'L ASSY			
검도 CHK	C.H.LEE 2011.03.17		총중량 G.W 4.3 lbs			
설계 DGN	Y.S.JEON 2011.03.11	도면 번호 DRG. NO: RES13003CT0				Ver. 00 / Rev. -0
제도 DRG		일반공차 MC WO CT				RNE1002
		SCALE N/S	매수 SHEET 1 of 1			
		SIZE D				논-PRJT

HYUNDAI Rotem 현대로템주식회사

원안번호 REF. NO.

본 도면은 당사 재산으로써 외부에서 무단사용 및 유출 금지 - PROPERTY OF ISSUING ENTITY. CANNOT BE DISTRIBUTED OR REPRODUCED WITHOUT AUTHORIZATION.

CATIA

구분	치수	허용공차(±)		
주물 CASTING	~ 40	2	4	
	~ 30	2	3	
	~ 10	1	1.5	
	< 3	0.5	1	
절삭 MACHINING	~3150	-	7	
	~1600	4	5	
	~ 800	3	4	
	~ 400	2	3	
	~ 200	1.5	2	
	~ 100	1	1.5	
등급 CLASS		A	B	
용접 WELDING	~ 200t	8	14	24
	~ 150t	7	12	21
	~ 120t	6	10	18
	~ 90t	5	8	14
	~ 60t	4	6	11
	~ 25t	3	4	8
	~ 9t	2	3	6
	~ 3t	1	2	4
	~ 1t	1	2	3
	~ 30	1	1	1
등급 CLASS		A	B	C
주물 CASTING	~ 20t	-	5.0	8.0
	~ 15t	-	5.0	7.0
	~ 10t	-	4.0	6.0
	~ 6t	-	3.0	5.0
절삭 MACHINING	~ 6t	0.8	2.0	4.0
	~ 2t	0.5	1.2	3.0
	~ 1t	0.3	0.8	2.0
	~ 115	0.2	0.5	1.2
	~ 120	0.15	0.3	0.8
	~ 3t	0.1	0.2	0.5
	3~5	0.05	0.1	0.2
등급 CLASS		A	B	C

구분치공차 일반공차표 GENERAL TOLERANCE

APPROVED 2012.11.02 Hyundai Rotem Company

Hyundai Rotem 254096 2012-11-02 11:10
Hyundai Rotem|10.196.33.77|254096|2012-11-02 11:17:07

NOTE.

1. BOLT TYPE DESCRIPSION
   (17) — Item no.
2. EMC TAPE LENGTH DESCRIPTION
   (18)-341mm — Length; Item no.
3. Non-assigned connector should be filled with plug & socket pins.

NO.	TYPE	SIZE	Q'TY
17-1	FLAT HEAD BOLT	M3XL8	~~14~~ 18
17-2	ROUND HEAD BOLT	M3XL6	12
	SPRING WASHER	M3XØ5.5Xt0.8	
	FLAT WASHER	M3XØ5.8Xt0.5	
17-3	NUT	M4	4
	SPRING WASHER	M4XØ5.8Xt1.0	
	FLAT WASHER	M4XØ7.8Xt0.8	

TECHNICAL DATA :

1. SPEAKER
   1) IMPEDANCE: 8ohm ±15%
   2) POWER RATING: 3W (MAX.5W)
   3) SOUND PRESSURE LEVEL: 86 85dB±3dB
   4) RESONANCE FREQUENCY: 240 250 ±20%
   5) FREQUENCY RANGE: 0~20,000Hz F0~15kHz
2. WEIGHT: 4kg
3. SURFACE TREATMENT
   1) ITEM: NO.1,2,13,16
      - COLOR: BLACK
      - COLOR CODE: UT-72IN TOP N-1.5,G20
      - MAKER: PPG

X2: PIN ASSIGNMENT
ITH06F18-19SB0F6

NO.	ITEM
A	PA1+(in)
B	PA1-(in)
C	PA1 SH(in)
D	
E	
F	
G	
H	G MIC SH
J	G MIC+
K	G MIC-

X1: PIN ASSIGNMENT
ITH06F28-21SB0F6
~~ITH03FPA28-21PB0G1F6~~

NO	ITEM	NO	ITEM
A	POWER1-VCC	a	CCC RX+
B	POWER1-GND	b	CCC RX-
C	LIVE	c	CCC SH
D	LIVE ACC GND(in)	d	CCC TX+
E		e	CCC TX-
F		f	G-SW+
G		g	MUTE+
H		h	MUTE-
J		j	G-SW-
K		k	PWM+
L	PEI RX+(in)	m	PWM-
M	PEI RX-(in)	n	PWM SH
N	PEI SH (in)	p	
P	PEI TX+(in)	r	POWER VCC(OPA)
R	PEI TX-(in)	s	POWER GND(OPA)
S			
T			
U			
V	DUAL TONE+(in)		
V	DUAL TONE-(in)		
X	DUAL TONE SH(in)		
Z			

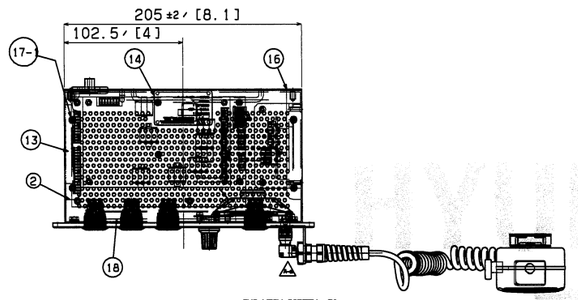

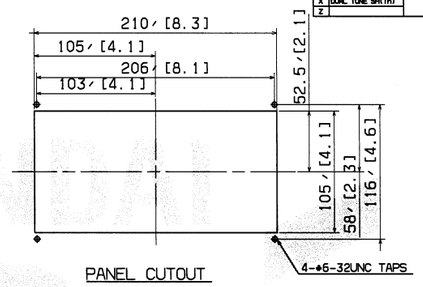

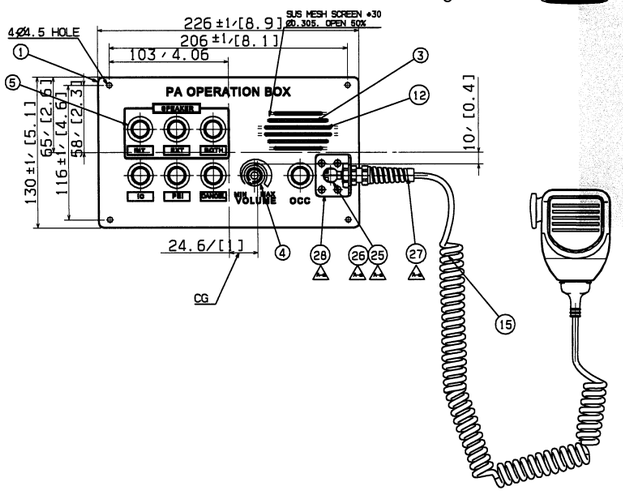

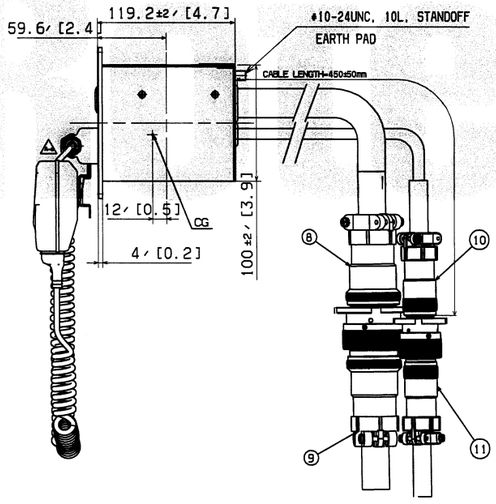

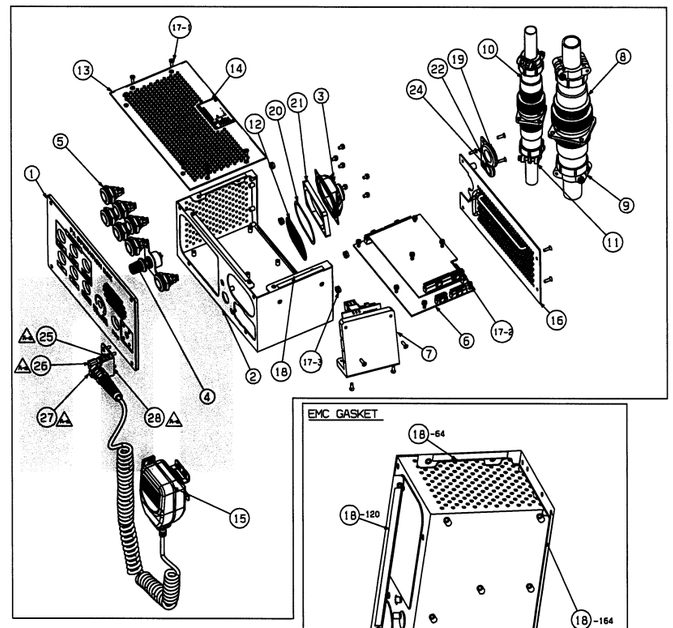

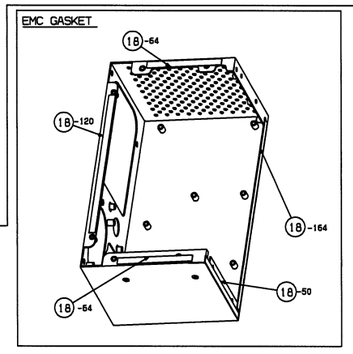

ITEM	DESCRIPTION	SPEC	DAS NO.			TREATMENT
1	FRONT PANEL	304SS, t=4.0	RID000373			PAINTING
2	CPO FRAME	ASS1-CG, t1.0	RID000050			PAINTING
3	SPEAKER	PM8M070-8-8N12,SCR ø070X51-30W-8ohm/8ohm,5ohm,3W	RID000374			
4	VOLUME CONTROL	RV097N-20F-B103K/TOCOS	RID001118			
5	ILLUMINATED SWITCHES	AW61L0V-A8900Z/WPM	RID000382			
6	CPO CONTROL BOARD	ASSY,V18	RID000372			
7	POWER CONVERTER BOARD	Vicor,V18	RID000376			
8	CONNECTOR X1	ITH06F28-21SB0F6/GLENAIR				
9	CONNECTOR X1	ITH03FPA28-21PB0G1F6/GLENAIR				
10	CONNECTOR X2	ITH06F18-19SB0F6/GLENAIR				
11	CONNECTOR X2	ITH03FP18-19PB0G1F6/GLENAIR				
12	WIRE MESH	304SS,SCREEN ◇30,ø0.3	RID000450	-	01	
13	UPPER COVER	ASS1-CG , t1.2	RID000379			
14	NAME PLATE	AL, t=1	RID000452	-	09	
15	HAND MIC	HMC-3G/HEMCCCO	RID000381			
16	REAR COVER	A356-91 , t1.2	RID000375			PAINTING
17	BOLT & NUT LIST	ASS'Y				
18	EMC GASKET	SF0500151-C-NR-A, E-Gang				
19	RUBBER GROMMET	EPDM, ø8.9mm(0.75 inch)	RID000451			
20	SHEET	304SS, t=0.7	RID000450	-	03	
21	RUBBER SHEET	RUBBER	RID000377			
22	GROMMET BRACKET	A356-91, t=1.0	RID000452			PAINTING
23	CPO WIRING DIAGRAM	ASSY	RID000453			
24	RUBBER GROMMET	EPDM, ø8.9mm(0.591inch)	RID000397			
25	CONNECTOR	SH-S-E(CC) SH-S-E(C)				
26	CONNECTOR	SH-S-E(PL) SH-S-E(PL)				
27	CABLE CLAMP	SST-8,PA6,HIELM1				
28	CONNECTOR BRACKET	304SS,t1.5				

Fx1	2012.07.16	The supplier improved the connector.	Y.S.JEON	C.Y.LEE	S.H.PARK	품번 NO.	부품 번호 PART NO.
Ex1	2012.03.15	The supplier revised the drawing.	Y.S.JEON	C.Y.LEE	S.H.PARK	승인 APP	S.H.PARK 2011.03.25
Dx1	2012.01.05	The supplier revised painting spec.	Y.S.JEON	C.Y.LEE	S.H.PARK	검도 CHK	C.Y.LEE 2011.03.17
Cx1	2011.11.25	The figure was changed for interference	Y.S.JEON	C.Y.LEE	S.H.PARK	설계 DGN	Y.S.JEON 2011.03.11
Bx1	2011.10.25	The supplier revised the drawing for FDR	Y.S.JEON	C.Y.LEE	S.H.PARK	제도 DRG	
Ax1	2011.08.10	The MIC jack was changed by CUSTOMER	Y.S.JEON	C.Y.LEE	S.H.PARK		

기호 MARK	일자 DATE	변경내역 DETAIL OF REVISION(E.C ZONE)	설변번호 E.C NO.	설계 DGN	검도 CHK	승인 APP
Gx1	2012.11.01	The supplier added the item ◇25 ~ ◇28.	RNE1002-U144	Y.S.JEON	C.Y.LEE	S.H.PARK

품명 DESCRIPTION		재질 MATERIAL	수량 Q'TY	중량 W.T	비고 REMARKS
제목 TITLE	DRIVER PA OPERATION BOX				
제품 중량 G.W	9.3 lbs				
도면 번호 DRG. NO	RES14001CT0			Ver.	00
				Rev.	-G
SCALE	N/S	매수 SHEET	1 of 1		
SIZE	D				

RNE1002

HYUNDAI Rotem 현대로템주식회사

DENVER RTD FASTRACKS
DRIVER PA OPERATING BOX
RID1473-25854 Ab

WOOJIN

DIM. IN mm | SCALE 1 / 1 | DATE 2011.07.10 | DRAWN B.H.KANG | CHECKED - | ENGINEER J.Y.LEE | APPROVED B.J. JONE

GENERAL TOLERANCE

APPROVED
2012. 11. 02
Hyundai Rotem Company

본 도면은 당사 재산으로써 도면내의 무단복사/배포 금지함 - PROPERTY OF ISSUING ENTITY. CANNOT BE DISTRIBUTED OR REPRODUCED WITHOUT AUTHORIZATION.

CATIA

RELEASED 2012.11.02

TECHNICAL DATA :

1. SPEAKER
   1) IMPEDANCE : 8ohm ± 15%
   2) POWER RATING : ~~10W~~ 25W
   3) SOUND PRESSURE LEVEL : ~~80~~ 93 ± 2dB
   4) RESONANCE FREQUENCY : ~~700 ±15%~~ 200Hz±50Hz
   5) FREQUENCY RANGE : ~~250~~-10,000 Hz
2. WEIGHT : ~~1.6kg~~ 2.0kg 200Hz~13KHz
3. SURFACE TREATMENT
   1) ITEM : NO. 2
      - COLOR : BLACK
      - COLOR CODE : UT-721N TOP N-1.5,G20
      - MAKER : PPG
   2) ITEM : NO. 1
      - HAIRLINE #180
   3) ITEM : NO. 3
      - S/TREATMENT : Zn PLATING

NOTE

1. BOLT TYPE DESCRIPTION
   (8) — ITEM NO.
2. EMC GASKET LENGTH DESCRIPTION
   (10)-255mm — LENGTH; ITEM NO.

CONNECTOR PIN ARRANGEMENT

1. SPEAKER+
2. SPEAKER-
3. NC

NO.	TYPE	SIZE	Q'TY
8-1	FLAT HEAD BOLT	M3XL8	4
8-2	ROUND HEAD BOLT	M4XL8	4
	SPRING WASHER	M4XØ6Xt0.8	
	FLAT WASHER	M4XØ6.8Xt0.5	
8-3	ROUND HEAD BOLT	M3XL14	2
	SPRING WASHER	M3XØ5.8Xt1.0	
	FLAT WASHER	M3XØ11Xt0.8	

GROUP NO.	ITEM	DESCRIPTION	SPEC	DWG NO.			S/TREATMENT
1	1	FRONT PANEL	304SS, t3	RID000403			HAIRLINE#180
1	2	REAR COVER	A591-CQ, t=1.0	RID000402			PAINTING
1	3	BRACKET	A366-91, t=1.2	RID000401			Zn PLATING
1	4	SPEAKER	SF-4025C,25W/DAESHIN ENG. ~~EXTERIOR:AES ELECTECH~~	RID000405			
1	5	MSC CONNECTOR	231-603/019-000, WAGO				
1	6	MSC CONNECTOR	231-103/037-000, WAGO				
1	7	SEALING GASKET	EPDM CR FORM, t5	RID000406			
1	8	BOLT & NUT LIST	ASS'Y				
1	9	NAME PLATE	AL, t=1	RID000452	-	14	
4	10	EMC GASKET	SF050010R-C-NA-A, E-Song				
1	11	BOND	THREE BOND, 1521				
1	12	RUBBER SHEET	EPDM, t3.0	RID000404			
1	13	RUBBER GROMET	EPDM, Ø15mm(0.59 inch)	RID000397			
1	14	WIRE MESH	304SS,SCREEN #30,Ø0.3	RID001045			
1	15	ESP WIRING DIAGRAM	ASSY	RID000498			

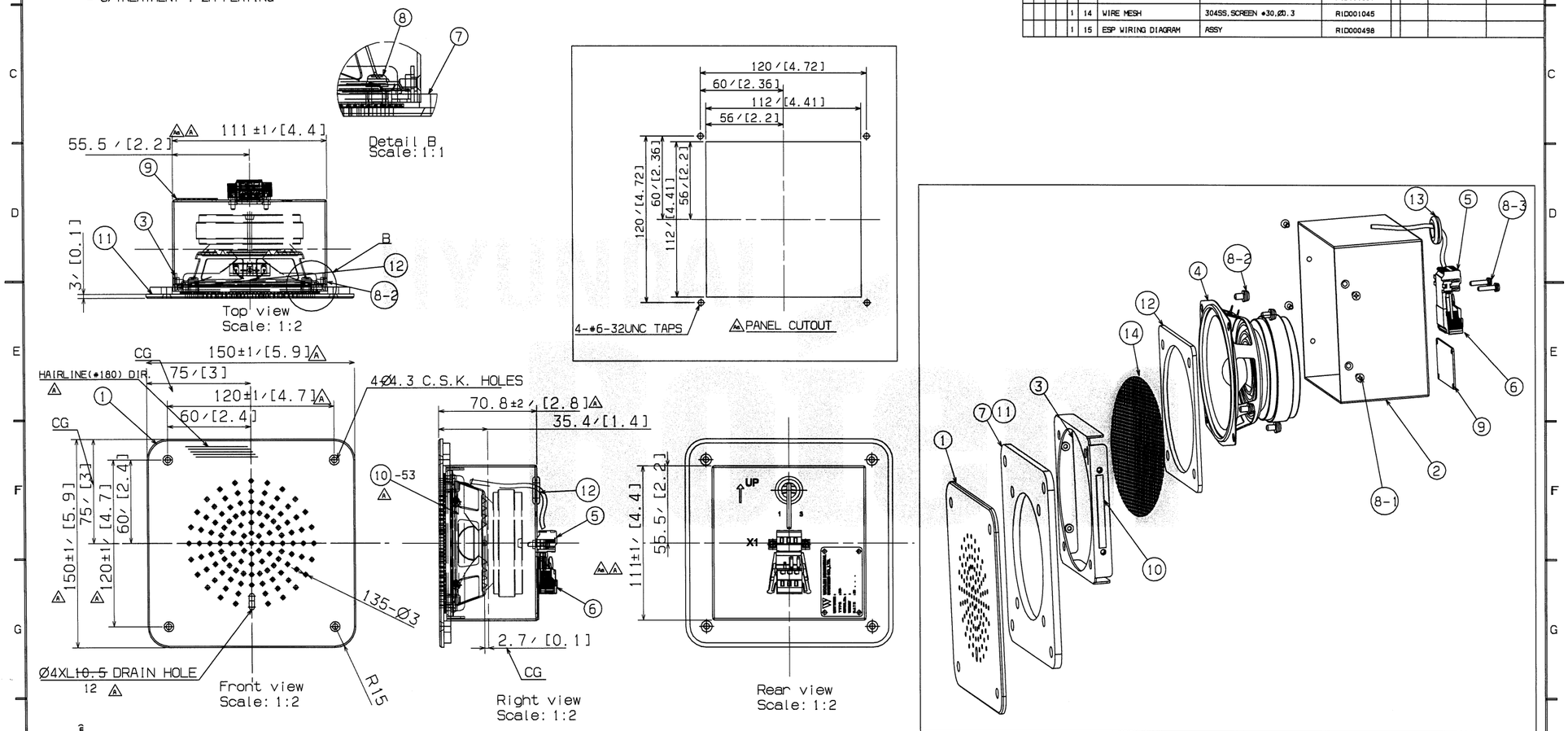

CHANGE		
1	1)Weight changed. 2)Size changed(Depth changed). 3)Speaker Technical SPEC. Maker revised. 4)Thermo hole revised.(was 0.5mm) 5)Tolerance added.	2012.03.12
2	1)Dim's & Tolerance changed. 2)Panel cutout hole changed.	2012.11.01

GENERAL TOLERANCE (UNLESS OTHERWISE SPECIFIED)

DIMENSION	MACHINE	WELDING	CASTING
0.5 ~ 3mm	±0.1	±0.3	
3 ~ 6mm	±0.1	±0.5	
6 ~ 30mm	±0.2	±0.5	±1
30 ~ 120mm	±0.3	±0.8	±1.5
120 ~ 400mm	±0.5	±1.2	±2
400 ~ 1000mm	±0.8	±2.0	±3
1000 ~ 2000mm	±1.2	±3.0	±4
2000 ~ 4000mm	±2	±4.0	±6
4000 ~ 7000mm	±3	±6.0	±8
7000 ~ 10000mm	±4	±8.0	±10
10000 ~ 20000mm	±5	±10.0	±12
20000 ~ 30000mm	±6	±12.0	±15
30000 ~ 40000mm	±8	±15.0	±20

등급 GRADE	A	B	C
주물, 주강품 CASTING (±)			
~20M	8	14	24
~15M	7	12	21
~12M	6	10	18
~8M	5	8	14
~4M	4	6	11
~2M	3	4	8
~1M	2	3	6
~315	1	2	4
~120	1	2	3
~30	1	1	1
등급 GRADE	A	B	C
용접 구조물 WELDING (±)			
~20M	-	6.0	8.0
~15M	-	5.0	7.0
~12M	-	4.0	6.0
~8M	-	3.0	5.0
~4M	0.8	2.0	4.0
~2M	0.5	1.2	3.0
~1M	0.3	0.8	2.0
~315	0.2	0.5	1.2
~120	0.15	0.3	0.8
~30	0.1	0.2	0.5
3~6	0.05	0.1	0.2
등급 GRADE	A	B	C
기계 가공품 MACHINING (±)			
규정치않은 일반공차표 GENERAL TOLERANCE			

치수 DIMENSION			
~ 40	2	4
~ 30	2	3
~ 10	1	1.5
< 3	0.5	1
길이 LENGTH			
~3150	-	7
~1600	4	5
~800	3	4
~400	2	3
~200	1.5	2
~100	1	1.5

MEMO

DIM. IN (mm) | SCALE 1 / 2 | Ø : WMS C 402

WOOJIN Industrial Systems Co.,Ltd.

DATE	2011.07.10	APPROVED
DRAWN	B.H.KANG	B. J. JONE
DESIGNED	-	
CHECKED	J.Y.LEE	

DENVER RTD FASTRACKS

EXTERIOR SPEAKER

RID1473-25858 | A

APPROVED 2012. 11. 02 Hyundai Rotem Company

품번 NO.	부품 번호 PART NO.	품명 DESCRIPTION	재질 MATERIAL	수량 Q'TY	중량 W.T	비고 REMARKS

승인 APP	S.H.PARK 2011.03.25	제작 MAT'L ASSY
검도 CHK	C.Y.LEE 2011.03.17	총중량 G.W 4.6 lbs
설계 DGN	Y.S.JEON 2011.03.11	일반공차 MC WD CT: B
제도 DRG		SIZE C

TITLE: EXTERIOR SPEAKER

도면 번호 DRG. NO: RES17001CT0 | MS | Ver. 00 | Rev. -E

SCALE N/S | 매수 SHEET 1 of 1

HYUNDAI Rotem 현대로템주식회사

참고번호 REF. NO.

RNE1002 | 단-PRJT | 정리번호

MARK	DATE	DETAIL OF REVISION(E.C ZONE)	설변번호 E.C NO.	설계 DGN	검도 CHK	승인 APP
Ex1	2012.11.01	The supplier changed the dimension & tolerance.	RNE1002-U144	Y.S.JEON	C.Y.LEE	S.H.PARK
Dx1	2012.03.15	The supplier changed the drain hole.		Y.S.JEON	C.Y.LEE	S.H.PARK
Cx1	2012.01.05	The supplier revised painting spec.		Y.S.JEON	C.Y.LEE	S.H.PARK
Bx1	2011.12.01	The supplier revised the drawing for FDR		Y.S.JEON	C.Y.LEE	S.H.PARK
Ax1	2011.10.25	The supplier revised the drawing for FDR		Y.S.JEON	C.Y.LEE	S.H.PARK

본 도면은 당사 재산으로서 허가없이 무단복사/배포 금지함. PROPERTY OF ISSUING ENTITY. CANNOT BE DISTRIBUTED OR REPRODUCED WITHOUT AUTHORIZATION.

CATIA

Hyundai Rotem 254096 2012-11-02 11:10
Hyundai Rotem|10.198.33.77|254096|2012-11-02 11:21:06

RELEASED 2012.11.02

TECHNICAL DATA :

1. SPEAKER
   1) IMPEDANCE : 8ohm ± 15%
   2) POWER RATING : 25W
   3) SOUND PRESSURE LEVEL : 93 ± 2dB
   4) RESONANCE FREQUENCY : 200Hz ± 50Hz
   5) FREQUENCY RANGE : 200~13KHz
2. WEIGHT : 1.9kg
3. SURFACE TREATMENT
   1) ITEM : NO. 1,2
      - COLOR : BLACK
      - COLOR CODE : UT-721N TOP N-1.5,G20
      - MAKER : PPG
   2) ITEM : NO. 3
      - S/TREATMENT : Zn PLATING

NOTE

1. BOLT TYPE DESCRIPTION
   12-
   └ ITEM NO.
2. EMC GASKET LENGTH DESCRIPTION
   11 -255mm
   └ LENGTH
   └ ITEM NO.

NO.	TYPE	SIZE	Q'TY
12-1	ROUND HEAD BOLT	M3xL8	4
	SPRING WASHER	M3xØ6xt0.8	4
	FLAT WASHER	M3xØ6.8xt0.5	4
12-2	ROUND HEAD BOLT	M3xL14	2
	SPRING WASHER	M3xØ6xt0.8	2
	FLAT WASHER	M3xØ6.8xt0.5	2
12-3	FLAT HEAD SCREW	M3xL8	4

GROUP NO.	ITEM	DESCRIPTION	SPEC	DWG NO.			S/TREATMENT
1	1	FRONT PANEL	A366-91, t3.2	R1D000409			PAINTING
1	2	REAR COVER	A366-91, t1	R1D000408			PAINTING
1	3	BRACKET	A366-91, t1.2	R1D000407			Zn PLATING
1	4	SPEAKER	SF-4025C ~~AND ELECTECH~~ DAE-SHIN	R1D000405			
1	5	WIRE MESH	304SS, SCREEN ø30, Ø0.3	R1D000449	-	01	
1	6	SHEET	304SS, t0.7	R1D000449	-	02	
1	7	CONNECTOR	231-603/019-000, WAGO				
1	8	CONNECTOR	231-103/037-000, WAGO				
1	9	NAME LABEL	AL, t=1	R1D000452	-	13	
1	10	RUBBER GROMMET	EPDM, Ø15mm(0.591inch)	R1D000397			
2	11	EMC GASKET	SF050010R-C-NA-A, E-SONG				
1	12	BOLT & WASHER LIST	ASSY				
1	13	GASKET	RUBBER, t5.0	R1D000410			
1	14	CSP WIRING DIAGRAM	ASSY	R1D000499			

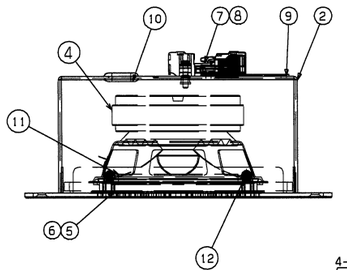

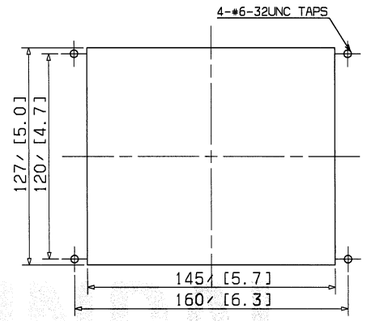

PANEL CUTOUT

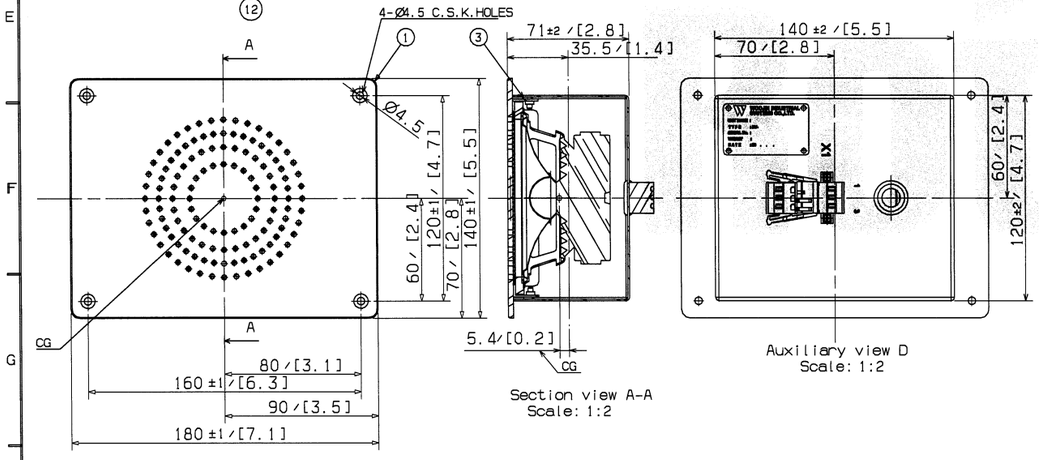

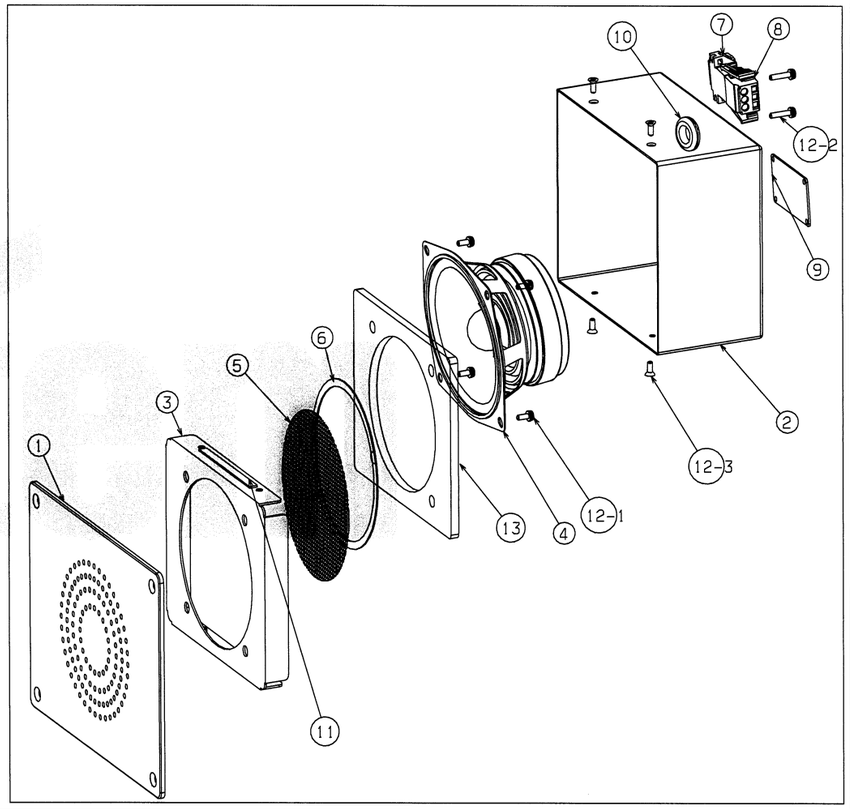

등급 GRADE	A	B
주조, 주강품 CASTING (±)		
~20M	8	14
~15M	7	12
~12M	6	10
~8M	5	8
~4M	4	6
~2M	3	4
~1M	2	3
~315	1	2
~120	1	2
~30	1	1

등급 GRADE	A	B	C
용접 구조물 WELDING (±)			
~20M	-	6.0	8.0
~15M	-	5.0	7.0
~12M	-	4.0	6.0
~8M	-	3.0	5.0
~4M	0.8	2.0	4.0
~2M	0.5	1.2	3.0
~1M	0.3	0.8	2.0
~315	0.2	0.5	1.2
~120	0.15	0.3	0.8
~30	0.1	0.2	0.5
3~6	0.05	0.1	0.2

등급 GRADE	A	B	C
기계 가공품 MACHINING (±)			
~40	2	4	
~30	2	3	
~10	1	1.5	
< 3	0.5	1	
~3150	-	7	
~1600	4	5	
~800	3	4	
~400	2	3	
~200	1.5	2	
~100	1	1.5	

규정치않은 일반공차표
GENERAL TOLERANCE

CHANGE			
Remarking 1) Welds & Parts deleted. 2) P/No. & Shapes revised.	2012.03.12	H.YSHIN	B.J.JONE A
Remarking 1) Speaker moved. 2) Front panel shape changed. 3) Gasket shape changed. 4) Bracket shape changed.	2012.07.05	H.YSHIN	B.J.JONE B
P/No. 4 maker changed.	2012.10.23	H.YSHIN	B.J.JONE Bb

MEMO

DIM. (N) mm
SCALE 1 / 2
ø : WMS C 4021

DATE	2011.09.30	APPROVED
DRAWN	B.H.KANG	B.J.JONE
DESIGNED	-	
CHECKED	J.Y.LEE	

DENVER RTD FASTRACKS

CAB SPEAKER ASS'Y

R1D1473-25858 Bb

APPROVED
2012.11.02
Hyundai Rotem Company

MARK	DATE	DETAIL OF REVISION(E.C ZONE)	설변번호 E.C NO.	설계 DGN	검도 CHK	승인 APP
Ex1	2012.11.01	The supplier coorected the bendor of Item #4.	RNE1002-U144	Y.S.JEON	C.Y.LEE	S.H.PARK
Dx1	2012.07.16	The Output holes are rearranged.		Y.S.JEON	C.Y.LEE	S.H.PARK
Cx1	2012.03.15	Customer request to delete volume control.		Y.S.JEON	C.Y.LEE	S.H.PARK
Bx1	2012.01.05	The supplier revised painting spec.		Y.S.JEON	C.Y.LEE	S.H.PARK
Ax1	2011.10.25	The supplier revised the drawing for FDR		Y.S.JEON	C.Y.LEE	S.H.PARK

	PART NO.	DESCRIPTION	MATERIAL	O'TY	W.T	REMARKS
승인 APP	S.H.PARK 2011.03.25	재질 MAT'L ASSY				
검도 CHK	C.Y.LEE 2011.03.17	총중량 G.W 4.3 lbs				
설계 DGN	Y.S.JEON 2011.03.11	일반공차 MC WD CT: B				
제도 DRG		SIZE C				

품번 NO. / 부품 번호 PART NO. / 품명 DESCRIPTION

명칭 TITLE: CAB SPEAKER

도면 번호 DRG. NO: RES18001CT0 MS — Ver. 00 Rev. -E

SCALE N/S — 매수 SHEET 1 of 1

참고번호 REF. NO.

HYUNDAI Rotem 현대로템주식회사

RNE1002

년-PRJT

정리번호

CATIA

Hyundai Rotem 254096 2012-11-02 11:10
Hyundai Rotem|10.196.33.77|254096|2012-11-02 11:21:37

본 도면은 당사 재산으로서 허가없이 무단복사/배포 금지됨. PROPERTY OF ISSUING ENTITY. CANNOT BE DISTRIBUTED OR REPRODUCED WITHOUT AUTHORIZATION.

TECHNICAL DATA :

1. INPUT VOLTAGE : AC 230V
2. CURRENT CONSUMPTION : 1A
3. INTERFACE : CML DIGITAL VIDEO SIGNAL
4. COLOR FRONT FRAME : EX4505 S -TX-WH001 (WHITE)
5. DISPLAY : LTM190BT03, SAMSUNG
6. NUMBER OF PIXELS : 1,440x900
7. ACTIVE AREA : 408.2mm/16" x255.2mm/10"
8. COLORS : 16.7M
9. BRIGHTNESS : 300cd/m²
10. CONTRAST RATIO : 1,000:1
11. WEIGHT : ~~10.~~5 kg (Note 8)

12. SURFACE TREATMENT
    1) ITEM : NO.1,2
       - COLOR : GRAY
       - COLOR CODE : PANTONE COOL GRAY 1C
       - MAKER : CHOKWANG
    2) ITEM : NO. 4,22
       - S/TREATMENT : Zn PLATING

NOTE.

1. BOLT TYPE DESCRIPTION

   23-
   └ ITEM NO.

2. NON-ASSIGNED CONNECTOR SOCKETS/PINS SHOULD BE FILLED WITH SEALING PLUG. (SEALING PLUG : 10-305045-16, GLENAIR)

NO.	TYPE	SIZE	Q'TY
25-1	ROUND HEAD BOLT	M3xL6	29
	SPRING WASHER	M3xØ6xt0.8	29
	FLAT WASHER	M3xØ6.8xt0.5	29
25-2	ROUND HEAD BOLT	M3xL12	12
	SPRING WASHER	M3xØ6xt0.8	12
	FLAT WASHER	M3xØ6.8xt0.5	12
25-3	FAN HEAD SCREW	M4xL6	6
	SPRING WASHER	M4xØ6.8xt1.0	6
	FLAT WASHER	M4xØ7.8xt0.8	6
25-4	FLAT WASHER	M4xL8	10
	SPRING WASHER	M4xØ6.8xt1.0	10
	FLAT WASHER	M4xØ7.8xt0.8	10

GROUP NO.	ITEM	DESCRIPTION	SPEC	DWG NO.			S/TREATMENT
1	1	MAIN FRAME	A356-91, t1.2	RIC000040			PAINTING
1	2	COVER	A356-91, t1.2	RID000339			PAINTING
1	3	LCD PROTECTIVE COVER	POLYCARBONATE, t2.0	RID000341			
1	4	LCD INVERTER BRACKET	A356-91, t1	RIC000039			Zn PLATING
1	5	TFT LCD PANEL	LTM190BT03, SAMSUNG				
1	6	LCD INVERTER	GREEN C&C TECH GH317A, ~~SAMSUNG~~	(Note)			
1	7	VIDEO RX BOARD	PID-RXB, WIS	RID000338			
1	8	POWER CONVERTER BOARD	PID-PCB, WIS	RID000337			
1	9	WIRING HARNESS	PIDI-WH, WIS				
1	10	CONNECTOR (X1)	FRITS4102R16S-1PB001F6/GLENAIR				
1	11	CONNECTOR (X1)	FRITS4105F16S-15B00F6/GLENAIR				
1	12	CONNECTOR (X2)	UTG01412P/FCI				
1	13	CONNECTOR(X2)	UTG014125,UTG016AC /FCI	(Note)			
2	14	STUD ~~RECEPTACLE S-IP-N~~	D8-316-218-190 ~~P3-365-101-650~~ SOUTHCO				
2	15	SPRING ~~BH-SQ-HEAD-DHELISHR~~	D4-EHF5-3-9500A ~~P3-372-001-049~~ SOUTHCO				
2	16	CLIP WASHER ~~FLEXTOR-SPRING-STAINLESS~~	D8-376-001-049 ~~P3-EHF5-3-950-0A~~ SOUTHCO	(Note)			
2	17	RETAINER ~~BH-RIVET-PLATE-RESIST~~	D8-326-101-200 ~~P3-336-600-130~~ SOUTHCO	(Note)			
2	18	RECEPTACLE ~~TAMPER-RESISTANT~~	D8-336-400-121 ~~P3-316-660-130~~ SOUTHCO	(Note)			
1	19	NAME PLATE	AL, t=1	RID000452	-	06	
1	20	FIXED WIRE	WIRE	RID000461	-	02	
2	21	TIE-MOUNT	JOTM-255, JEOND ELECTRIC				
1	22	LCD BRACKET	A356-91, t1	RIC000037			Zn PLATING
2	23	DUST COVER	-				
2	24	WIRE BRACKET	A356-91, t2	RID000461	-	01	
1	25	BOLT & WASHER LIST	ASSY				
2	26	CONNECTOR(X3,X4)	BCP-C7FA, CANARE				
1	27	PIDI WIRING DIAGRAM	ASS'Y	RID000442			

X1 : PIN ASSIGNMENT
FRITS4102R16S-1PB0G1F6

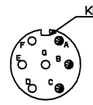

NO.	ITEM
A	TX1+(In)
B	TX1-(In)
C	TX1 SH(In)
D	
E	
F	
G	

X2 : PIN ASSIGNMENT
UTG01412P

NO.	ITEM
A	POWER VCC
B	POWER GND
C	
D	ADD2
E	ADD3
F	ADD4
G	ADD5
H	ADD6
J	ADD7
K	ADD8
L	ADD9
M	ADD GND

X3 : BNC CONNECTOR

PIN NO.	REMARK
CENTER	VIDEO OUT
SHIELD	GND

X4 : BNC CONNECTOR

PIN NO.	REMARK
CENTER	VIDEO IN
SHIELD	GND

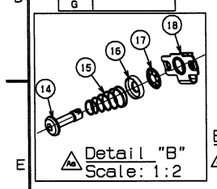

Detail "B"
Scale: 1:2

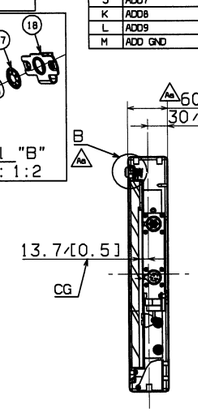

Section view B-B
Scale: 1:5

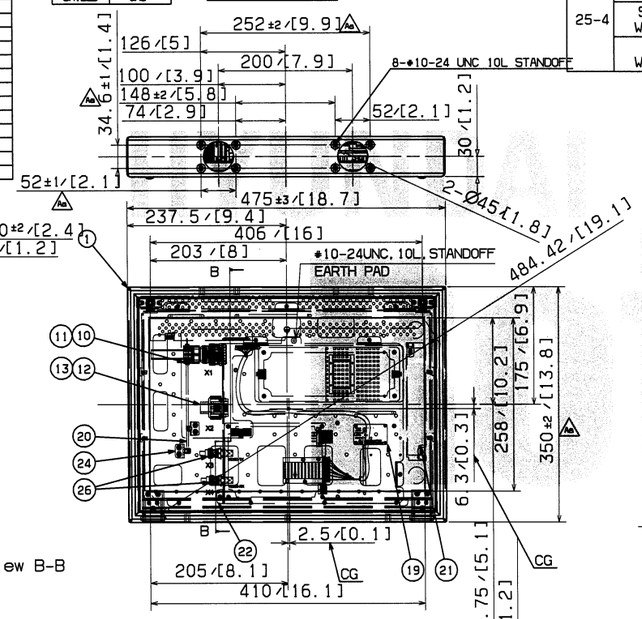

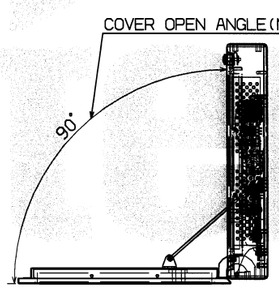

Right view
Scale: 1:5

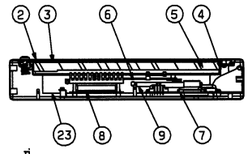

Section view A-A

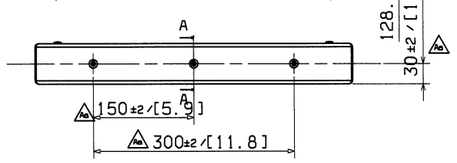

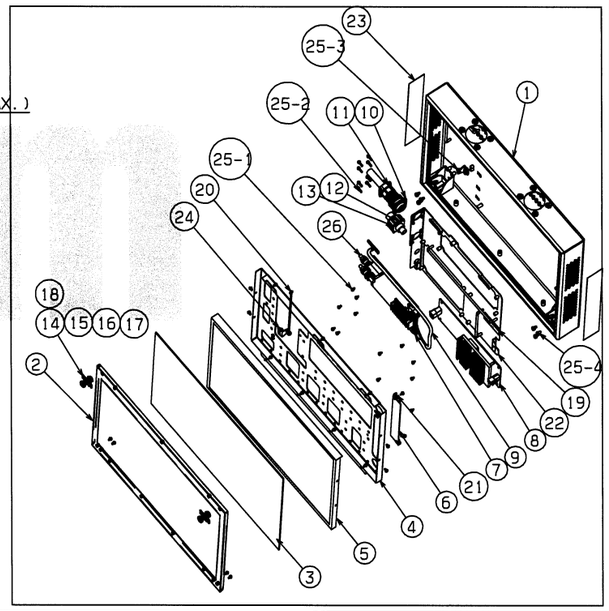

CHANGE			
11WH (QTY. changed. 21P/No. 14~18 Revised. 31DH is 3-D dimension added. 43DH is 3D added.	2012.03.14	K.YBHH	B.J.JONE
2/No. 1,2 Material changed. P/No. 13 connector Spec. corrected.	2012.10.23	K.YBHH	B.J.JONE

GENERAL TOLERANCE (UNE-C-4.0001)

1000MM	PROBE		
0.1 ~ 1.0MM	±0.1	±0.1	±0.1
1.1 ~ 3.0MM	±0.2	±0.2	±0.2
3.1 ~ 6.0MM	±0.3	±0.3	±0.3
6.1 ~ 10.0MM	±0.4	±0.4	±0.4
10.1 ~ 30.0MM	±0.5	±0.5	±0.5
30.1 ~ 100.0MM	±0.6	±0.6	±0.6
100.1 ~ 300.0MM	±0.7	±0.7	±0.7
300.1 ~ 1000.0MM	±0.8	±0.8	±0.8
1000.1 ~ 2000.0MM	±0.9	±0.9	±0.9
2000.1 ~ 3000.0MM	±1.0	±1.0	±1.0
3000.1 ~ 4000.0MM	±1.1	±1.1	±1.1
4000.1 ~ 5000.0MM	±1.2	±1.2	±1.2
5000.1 ~ 6000.0MM	±1.3	±1.3	±1.3
6000.1 ~ 7000.0MM	±1.4	±1.4	±1.4
7000.1 ~ 8000.0MM	±1.5	±1.5	±1.5
8000.1 ~ 9000.0MM	±1.6	±1.6	±1.6
9000.1 ~ 10000.0MM	±1.7	±1.7	±1.7
UNITTING	±0.5	±0.5	±0.5
UNITTING	±0.5	±0.5	±0.5
UNITTING	±0.5	±0.5	±0.5

NOTE

1. NON-ASSINGNED CONNECTOR SOCKETS/PINS SHOULD BE FILLED WITH SEALING PLUG. (SEALING PLUG : 10-305045-16, GLENAIR)

TECHNICAL DATA :

1. INPUT VOLTAGE : AC 230V
2. CURRENT CONSUMPTION : 1A
3. INTERFACE : CML DIGITAL VIDEO SIGNAL
4. COLOR FRONT FRAME : EX4505 S -TX-WH001(WHITE)
5. DISPLAY : SAMSUNG - LTM190M2(19")
6. NUMBER OF PIXELS : 1,440x900
7. ACTIVE AREA : 408.2mm/16" x255.2mm/10"
8. COLORS : 16.7M
9. BRIGHTNESS : 300cd/m²
10. CONTRAST RATIO : 1,000 ::1
11. WEIGHT : 7.6 kg
12. BOLT TYPE DESCRIPTION

(18)-
└

13. EMC TAPE LENGTH DESCRIPTION

(17)-341mm
└ LENGTH
└ ITEM NO.

14. SURFACE TREATMENT
1) ITEM : NO.1
- COLOR : GRAY
- COLOR CODE : PANTONE COOL GRAY 1C
- MAKER : CHOKWANG
2) ITEM : NO. 8,20
- COLOR : BLACK
- COLOR CODE : UT-721N TOP N-1.5,G20
- MAKER : PPG
3) ITEM : NO.4
- S/TREATMENT : Zn PLATING

ITEM NO.

NO.	TYPE	SIZE	Q'TY
18-1	ROUND HEAD BOLT	M3xL6	23
	SPRING WASHER	M3xØ5xt0.8	23
	FLAT WASHER	M3xØ5.8xt0.5	23
18-2	ROUND HEAD BOLT	M3xL12	4
	SPRING WASHER	M3xØ5xt0.8	4
	FLAT WASHER	M3xØ5.8xt0.5	4
18-3	FLAT HEAD SCREW	M3XL+08	8

X1: CONNECTOR PIN ASSIGMENT
1TH03FPA22-14PB0G1F6

NO.	ITEM
A	POWER VCC
B	
C	POWER GND
D	
E	TX1+(in)
F	TX1-(in)
G	TX1 SH(in)
H	
J	
K	
L	
M	
N	
P	
R	ADD1
S	ADD10
T	ADD GND
U	
V	

X2 : BNC CONNECTOR

PIN NO.	REMARK
CENTER	VIDEO IN
SHIELD	GND

X3 : BNC CONNECTOR

PIN NO.	REMARK
CENTER	VIDEO OUT
SHIELD	GND

GROUP NO.	ITEM	DESCRIPTION	SPEC	DWG NO.	S/TREATMENT
1	1	FRAME	A569, t3.0	R1C000044	PAINTING
1	2	PC COVER	POLYCARBONATE, t2.0	R1D000XXX	
1	3	TFT LCD PANEL	LTM190BT03, SAMSUNG		
1	4	LCD BRACKET	A366-91,t=1.0	R1C000041	Zn PLATING
1	5	LCD INVERTER	GH317A,GREEN C&C TECH. GH053A,-SAMSUNG-	Ab	
1	6	VIDEO RX BOARD	PID-RXB, WIS	R1D000338	
1	7	POWER CONVERTER BOARD	PID-PCB, WIS	R1D000337	
1	8	COVER	A591-CO, t1.2	R1C000043	PAINTING
1	9	CONNECTOR(X1)	1TH03FPA22-14PB0G1F6/GLENAIR		
1	10	CONNECTOR(X1)	1TH05F22-14SB0F6/ GLENAIR		
1	11	NAME PLATE	AL,t=1	R1D000452	- 07
5 ø	12	TIE MOUNT	JOTM-2SS, JEONO ELECTIRC		
7	13	WIRE MESH	DUST FILTER ø25, MYUNG-JIN ELECTRONICS		
1	14	WIRING HARNESS	PID2-WH, WIS		
1	15	BNC CONNECTOR BRACKET	A366-91, t1.0		
7	16	DUST COVER	-		
8	17	EMC GASKET	SF050010R-C-NA-A, E-SONG		
1	18	BOLT & WASHER LIST	ASSY		
2	19	CONNECTOR	BCP-C7FA, CANARE		
1	20	REAR COVER	A591-CO,t1.2	R1D000344	PAINTING
1	21	PID2 WIRING DIAGRAM	ASS'Y	R1D000441	

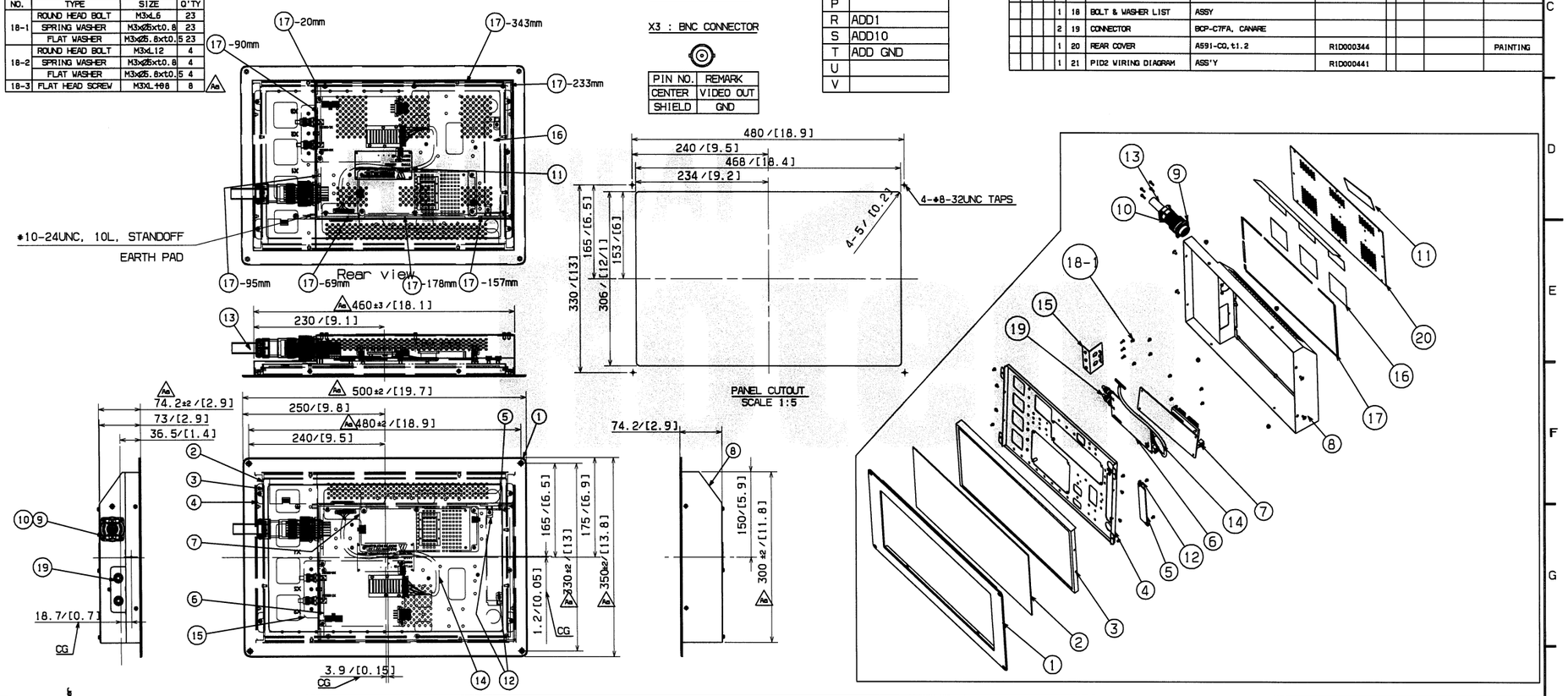

CHANGE			
1) Bolt, spec. revised. 2) Dwg. revised. 3) Tolerance added.	2012.03.12	DSN H.YSHIN	APP B.J.JONE
1) Bolt, Inverter spec. & color changed.	2012.10.23	DSN H.YSHIN	APP B.J.JONE

GENERAL TOLERANCE (UNLESS OTHERWISE SPECIFIED)

DIMENSION	~ 40	2	4
	~ 30	2	3
	~ 10	1	1.5
	< 3	0.5	1
주조 CASTING	~3150	-	7
	~1600	4	5
	~800	3	4
	~400	2	3
	~200	1.5	2
	~100	1	1.5
등급 CLASS		A	B
구멍 HOLE	구멍 HOLE (±)		
	~200	8	14
	~150	7	12
	~120	6	10
	~80	5	8
	~40	4	5
	~20	3	4
	~10	2	3
	~315	1	2
	~120	1	2
	~30	1	1
등급 CLASS		A	B
판금 WELDING	판금 WELDING (±)		
	~250	-	6.0
	~150	-	5.0
	~100	-	4.0
	~60	-	3.0
	~40	0.8	2.0
	~20	0.5	1.2
	~10	0.3	0.8
	~30	0.1	0.2
	~315	0.2	0.5
	~120	0.15	0.3
	~30	0.1	0.2
	1~5	0.05	0.1
등급 CLASS		A	B
가공 MACHINING	가공 MACHINING (±)		
구멍치수없은 일반공차로 GENERAL TOLERANCE			

APPROVED
2012. 11. 02
Hyundai Rotem Company

MEMO

DIM. IN mm	DATE	2011.10.07	APPROVED
SCALE 1 / 5	DRAWN	B.H.KANG	B. J. JONE
	DESIGNED	-	
	CHECKED	J.Y.LEE	

WOOJIN Industrial Systems Co., Ltd.

DENVER RTD FASTRACKS

LCD PASSENGER INF. DISPLAY ASS'Y WALL MOUNT

R1D1473-25852 Ab

기호 MARK	일자 DATE	변경내역 DETAIL OF REVISION(E.C ZONE)	설변번호 E.C NO.	설계 DGN	검도 CHK	승인 APP
Dx1	2012.11.01	The supplier corrected the vendor of item #5.	RNE1002-U144	Y.S.JEON	C.Y.LEE	B.H.PARK
Cx1	2012.03.15	The supplier revised the weight and Dim.		Y.S.JEON	C.Y.LEE	B.H.PARK
Bx1	2012.01.05	The supplier revised the painting spec.		Y.S.JEON	C.Y.LEE	B.H.PARK
Ax1	2011.10.25	The supplier revised the drawing for FDR		Y.S.JEON	C.Y.LEE	B.H.PARK

품번 NO.	부품 번호 PART NO.	품명 DESCRIPTION	재질 MATERIAL	수량 Q'TY	중량 V.T	비고 REMARKS
승인 APP	S.H.PARK 2011.03.25	재질 MAT'L ASSY				
검도 CHK	C.Y.LEE 2011.03.17	총중량 G.W 18.1 lbs				
설계 DGN	Y.S.JEON 2011.03.11	월 변 결 자 MC MO CT				
제도 DRG		B				
		SIZE D				

TITLE: LCD PASSENGER INFORMATION DISPLAY-2

도면 번호 DRG. NO: RES25003CT0 Ver. 00 Rev. -D RNE1002

SCALE N/S 매수 SHEET 1 of 1

참조번호 REF. NO.

HYUNDAI Rotem 현대로템주식회사

본 도면은 당사 재산으로써 외부에 무단배포 및 복제 · PROPERTY OF ISSUING ENTITY, CANNOT BE DISTRIBUTED OR REPRODUCED WITHOUT AUTHORIZATION.

CATIA

Hyundai Rotem 254096 2012-11-02 11:11
Hyundai Rotem|10.196.33.77|254096|2012-11-02 11:26:48